aalberts integrated piping systems

Pegler ProFlow

UK technical manual

PEGLER Valve technology

contents

Aalberts integrated piping systems 4

Pegler ProFlow 8

technical data 13

static applications 14
dynamic applications 15
applications 16
technical characteristics 17
installation guidelines 18
Pegler ProFlow BC3 balancing computer 28
how to use tables and charts 30
warranty 36

product range 37

balancing valves 37
tools and accessories 61

Aalberts integrated piping systems

don’t just buy products, buy solutions.

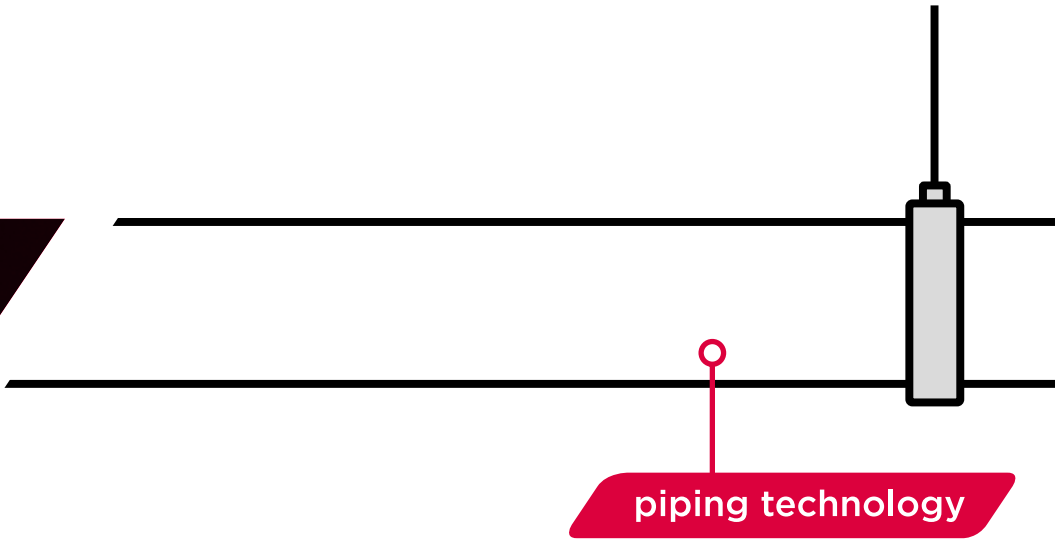

we are Aalberts integrated piping systems

Aalberts integrated piping systems engineers the most advanced integrated piping systems for the distribution and control of liquids and gases for key verticals, like industrial, utilities, commercial and residential. We offer fully integrated piping systems in valve, connection, fastening and piping technology. We work hand-in-hand with our customers to create the perfect integrated piping system, that meets their requirements. Our piping systems are easy to specify, install, control and maintain, saving important preparation and installation time. We meet the highest quality and industry standards needed in the selected verticals. We are the only business that truly offers its customers a single sourced and complete integrated piping solution, each and every time.
Don't just buy products, buy solutions.

our mission

With our integrated piping systems, supported by our unique Digital Design Service, we ensure that you will always get the best and easiest solution for the installation of an integrated piping system. From the moment that your plan is designed, you can get advice on complete and tailored solutions.
With our Revit Plug-in you have digital access to the complete product offering within Aalberts integrated piping systems. This information is always accessible and up to date, allowing the design of an optimal and economically attractive installation that will meet all your demands. So whether the task is project conception, installation, or on-going maintenance, we are the company that truly delivers a complete system and service offering. Our know-how, our can-do attitude, and our relentless innovation come as standard. We will sweat the small stuff in our quest to find the perfect solutions, even if we have to invent them.
This is how we deliver excellence.

our way of working

We operate from various regions around the globe: America, United Kingdom, Middle East, Asia Pacific and Europe. As we have multiple locations in many countries, we are always close to our customers. More than 3500 mission critical employees are persistent to offer the best integrated piping system. They work on our products, solutions and services every day. No matter how big the opportunity is, when we say we've got this, we won't let go until there is nothing left to learn. We improve ourselves by exchanging knowledge and experience to stay ahead of our competitors.
Good is never good enough.

With our sustainable spirit we contribute to circularity every single day. This belief is strongly linked to the way we do business. Rethink, reduce and recycle. We are entrepreneurial and take ownership in everything we do. We are convinced that self-development and diversity is essential.
The Aalberts way, winning with people.

the strength of Aalberts integrated piping systems

- the perfect solution for every project
- smart, fast and efficient installation
- valuable advice from the drawing board to delivery
- a very wide product range

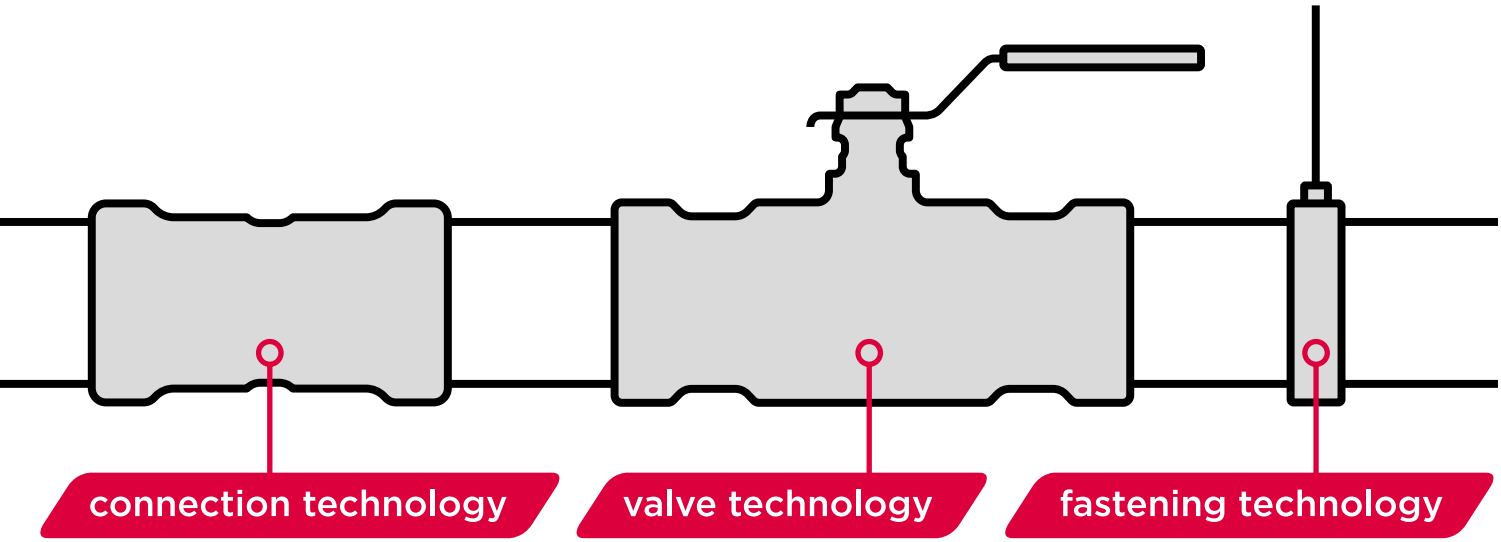

For more information about Aalberts integrated piping systems, go to www.aalberts-ips.eu

Aalberts integrated piping systems connect: our systems are easy to combine with each other

Aalberts integrated piping systems is the combination of different companies with a strong legacy in their markets. The individual brands are well-known and each represents a long history. Together they offer the best integrated piping system for now and in the future.

Connection technology

VSH
VSH, today Aalberts integrated piping systems B.V., has been supplying quality products for 90 years and delivers piping systems and fittings throughout the world. In the 1970's VSH brought the well-known VSH Super compression fitting on the market which is still a best-seller, followed by the VSH XPress pressfitting, a technology that makes it possible to realize a connection even faster and more reliable.

Shurjoint
The history of Shurjoint dates back to 1974, when the founders produced their first grooved couplings. These first couplings were produced from malleable iron, the casting material of choice at this time. Shurjoint is recognized as a worldwide brand in the design and manufacture of mechanical piping components.

Valve technology

Pegler Valves
The Pegler brand is well known and respected as being one of the leading manufacturers of advanced plumbing, heating and engineering products in the world. It's a reputation earned through a total dedication to quality, innovation and customer service, which has been the hallmark of the company since the establishment in the 1890's. Today Pegler is a key brand in the valve industry, bringing a continues flow of new products to the market, like the ProFlow. The ProFlow delivers an exceptional performance and accuracy throughout the entire range.

VSH PowerPress®

material	carbon steel
suitable for	thick-walled steel
connection	press / DW-profile
dimensions	½" - 2" (DN15 – DN50)

VSH Shurjoint

material	ductile iron / stainless steel
suitable for	thick-walled steel / stainless steel / HDPE
connection	groove
dimensions	½" - 104" (DN15 – DN2600)

Aalberts integrated piping systems range

We offer a series of product ranges that:

- connect seamlessly
- are available in dimensions from 6 mm up to 104" (DN2600)
- can be used for thick-walled pipe and thin-walled metal or plastic tube
- have press, compression, groove and push connections
- can be expanded with valves and accessories
- are BIM ready

Pegler Terrier

material	brass
suitable for	copper tubpe / multilayer tube (for push connections)
connection	push / threaded / compression
dimensions	8 - 15 mm

Pegler Valves

material	brass / bronze / carbon steel / stainless steel
suitable for	steel / carbon steel / stainless steel / copper
connection	threaded / press / push / flange
dimensions	DN15 – DN300

Pegler ProFlow

material	brass / ductile iron
suitable for	carbon steel / stainless steel / copper / plastic
connection	threaded / press / flange
dimensions	DN15 – DN300

VSH XPress

material	carbon steel / stainless steel / copper / cunifer
suitable for	carbon steel / stainless steel / copper / cunifer
connection	press / M-profile
dimensions	12 – 108 mm (DN10 – DN100)

VSH MultiPress

material	PPSU / brass
suitable for	plastic
connection	press / U & TH profile
dimensions	14 – 63 mm (DN10 – DN50)

VSH Tectite

material	copper / brass / stainless steel
suitable for	copper / carbon steel / stainless steel
connection	push
dimensions	10 – 54 mm (DN8 – DN50)

Pegler ProFlow

The Pegler ProFlow valve range offers installers a comprehensive commercial and balancing valve solution. Pegler ProFlow valves are manufactured in the UK at the Aalberts integrated piping system facility using the latest manufacturing processes, including the use of extruded material such as low-lead DZR Brass.

Our end-to-end process provides continuity of British manufacturing and testing, ensuring the highest level of reliability and quality. Our complete range of balancing valve technology, and expertise, ensure the accuracy, flexibility and system efficiency essential to building applications.

static balancing valves

The Pegler ProFlow 1260 fixed orifice series of valves provides isolation and balancing of piping systems and equipment, in both HVAC and general plumbing applications.

Each valve can be double regulated, closed and then reopened to a selected value, which can be set on commissioning. Additionally, the Pegler ProFlow 1260 series incorporates a measuring facility, and the flow rate can be verified using the Pegler ProFlow BC3 balancing computer.

advantages of the Pegler ProFlow static valves

1260 and V955

- DZR brass body with all threaded valves rated to 20 bar, and VSH XPress valves rated to 16 bar
- handwheel incorporating position indicator with double regulating feature on spindle
- ± 5% flow measurement accuracy across all setting points
- threaded connection. Also available pre-adapted using VSH XPress and VSH PowerPress® technology, facilitating heat free connections
- suitable for heating and cooling applications
- robust handle manufactured from tough, glass-reinforced polymer
- memory stop
- DN65 - DN300 flanged versions

dynamic balancing valves

The revolutionary Pegler ProFlow 1600 PICV (Pressure Independent Control Valve) comes complete with integrated bypass technology. This industry-leading innovation provides significant time and cost savings, with the use of a full velocity bypass making the installation, commissioning and maintenance process simple. The Pegler ProFlow 1600 PICV adds advanced functionality to control and accuracy. The differential pressure loss can be verified using the Pegler ProFlow BC3 balancing computer.

The new Pegler ProFlow 1500 is a great addition to the PICV family. With a range flexibility of DN15 to DN50, the new 1500 PICV comes complete with a direct fast flush cap giving simple access to removing the cartridge. The location of test points allow direct flow measuring utilising the built in venturi technology.

Both direct flow rates and differential pressure loss can be verified using the Pegler ProFlow BC3 balancing computer.

advantages of the Pegler ProFlow dynamic valves

1600 PICV

- DZR brass body with all threaded valves and VSH XPress valves rated to 16 bar
- removes potential of cartridge mix-up issues
- ensures bypass/flushing have been actioned to prevent future issues
- can be utilised as isolating valve - no need for ball valve inline
- less time removing cartridges for flushing
- prevents deposit of debris within product
- supports water treatment to meet timescales in accordance with BSRIA guidelines threaded

1500 PICV

- achieves etween 2% to 6% flow measurement accuracy across all setting points
- fast measuring with fixed venturi orifice
- easy cartridge exchange
- allows for full-flow flush
- settings visible when the actuator is attached

measuring and control

The Pegler ProFlow BC3 balancing computer is pre-programmed with the required loss coefficient data (Kvs values). This allows a direct measurement of flow rates to be obtained, thereby ensuring the system is balanced correctly to achieve optimum efficiency.

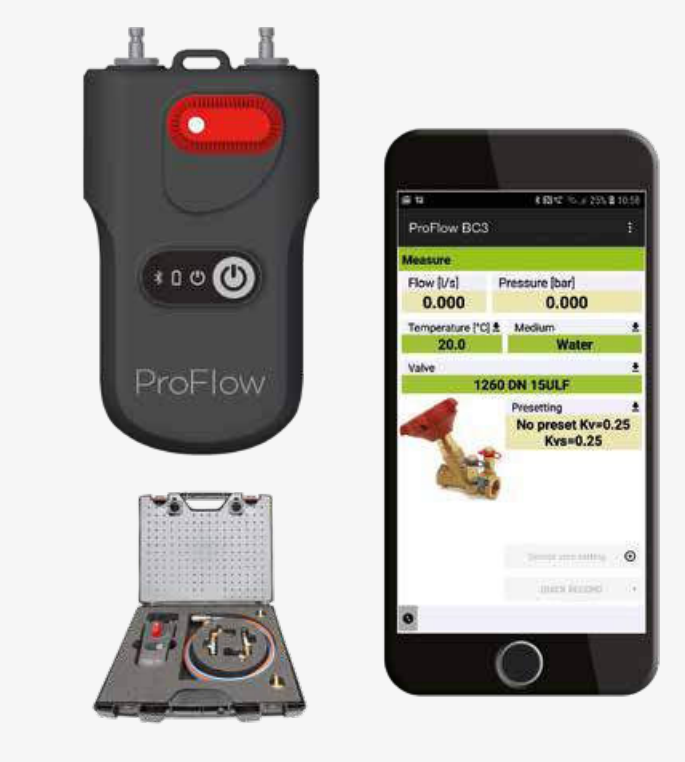

advantages

- simple and accessible interface
- user app for Android / iOS mobile devices
- ability to measure flow and differential pressures accurately
- digital compensation of temperature effects
- correction of antifreeze flow calculation
- easy selection of balancing valve according to valve illustration
- cover IP65 rated

actuation

The Pegler ProFlow Actuation range provide application solutions, including standard on/off thermic actuation to fast acting motoric actuators.

electro thermal actuation - on/off and modulating

Natural convection (passive) terminal units (i.e. passive chilled beams and underfloor heating) are designed to be less responsive to changes in room temperature than forced convection terminal units.

electro-motoric actuation - floating and proportional

Pegler ProFlow electro-motoric actuators can react to flow rate and heat output changes matching demand requirements rapidly, ensuring the perfect solution, suitable for convection terminal applications.

electro thermal actuator *electro motoric actuator*

embodied carbon

Measuring our carbon emissions is the first step on the path to reducing them. As manufacturers of integrated piping systems, disclosing the embodied carbon of our products is key for achieving credible full life cycle assessments of the systems and buildings we help build.

The embodied carbon of a product includes all emissions released during making, installing and end-of life disposal. This excludes any emissions produced during its use and any benefits of potential reuse, recovery or recycling of materials at the end of its life. In the case of Aalberts IPS products, most emissions originate from the raw materials used to make them. This report does not include embodied carbon of packaging.

The tables shows the embodied carbon of our products calculated using **CIBSE TM65***. The total embodied carbon is reported in **$kgCO_2e$**: kg of carbon dioxide equivalents. This shows the impact of all greenhouse gas emissions as if they were CO_2 to allow for unified reporting.

While we conduct further investigation into our supply chains, we are choosing to calculate embodied carbon by using industry average values for the percentage of recycled content in our raw materials.

total embodied carbon 1500 PICV Dynamic balancing valves

dimension		1500 article no.	$kgCO_2e$*	PS1500 article no.	$kgCO_2e$*	PSU1500 article no.	$kgCO_2e$*
DN15	LF	15112	3.28	15184	3.720	15459	4.148
DN15	SF	15113	3.278	15185	3.714	15461	4.142
DN15	HF	15114	3.271	15186	3.708	15463	4.136
DN20	SF	15115	5.214	15187	5.904	15464	6.488
DN20	HF	15116	5.234	15188	5.924	15466	6.508
DN25	SF	15117	7.983	15189	9.012	15467	9.922
DN25	HF	15118	7.982	15199	8.497	15469	9.921
DN32	HF	15119	10.193	15200	11.727	15479	12.930
DN40	SF	15272	17.879	15274	20.004	15488	21.420
DN50	HF	15273	19.854	15275	23.615	15489	24.623

total embodied carbon 1600 PICV Dynamic balancing valves

dimension		1600 article no.	$kgCO_2e$*	PS1600 article no.	$kgCO_2e$*	PSU1600 article no.	$kgCO_2e$*
DN15	LF	16001	4.422	16020	4.858	16050	5.287
DN15	SF	16002	4.416	16021	4.853	16051	5.282
DN15	HF	16003	4.409	16022	4.846	16052	5.275
DN20	SF	16004	6.988	16023	7.678	16053	8.333
DN20	HF	16005	6.887	16024	7.579	16054	8.232
DN25	SF	16006	8.486	16025	9.515	16055	10.428

** Embodied carbon calculated following 'Basic' calculation method described in CIBSE (2021) Embodied carbon in building services: a calculation methodology CIBSE TM65: 2021 (Hampshire: Hobbs the Printers Ltd) using CIBSE (2022) Embodied Carbon Calculator TM65 Digital Tool betaversion 1.1 January 2022 (London: Chartered Institution of Building Services Engineers)*

Pegler ProFlow

technical data

static applications

fan coil system with two-way motorized valves

The Pegler ProFlow 1260 provides hydronic balancing in variable flow systems in order to ensure that the optimum flow is achieved at all load conditions, in the fan coil units. The actuator controlling the two-way valve is connected to a room thermostat or BMS system. By opening or closing the two-way valve in reference to the room temperature the flow in each fan coil can be controlled, and the required temperature is achieved.

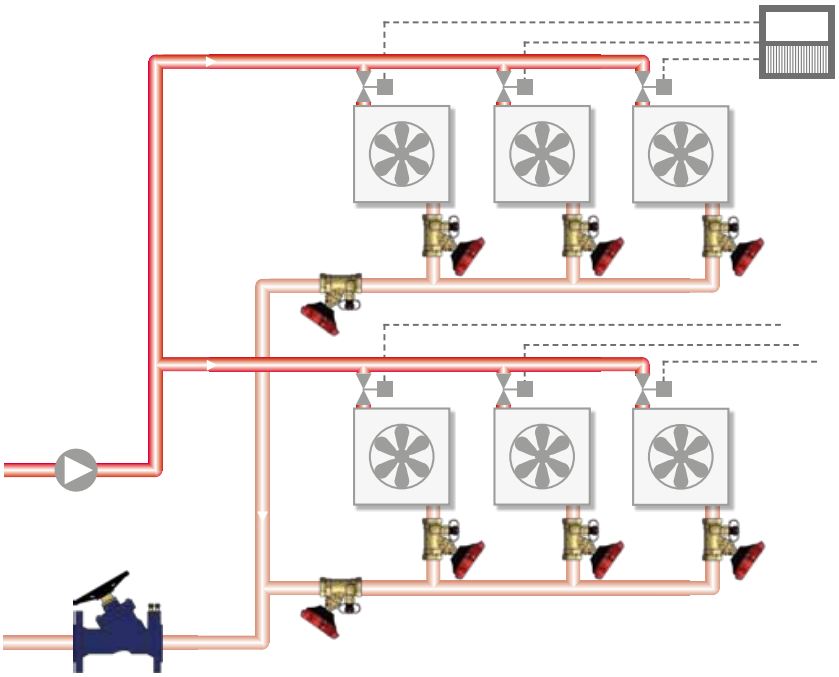

constant flow system

The Pegler ProFlow 1260 provides hydronic balancing in constant flow systems, using a three-way motorized valve, in order to ensure that the optimum flow is achieved for the units, at all load conditions. The Pegler ProFlow ensures that the pressure loss over the terminal unit branch is constant, regardless of the three-way valve position. The actuators controlling the three-way valve are connected to a thermostat or BMS system to control the flow in each unit (fan coil, air heater, radiant panel, etc). By opening or closing the three-way valve in reference to the room temperature, the required temperature is achieved.

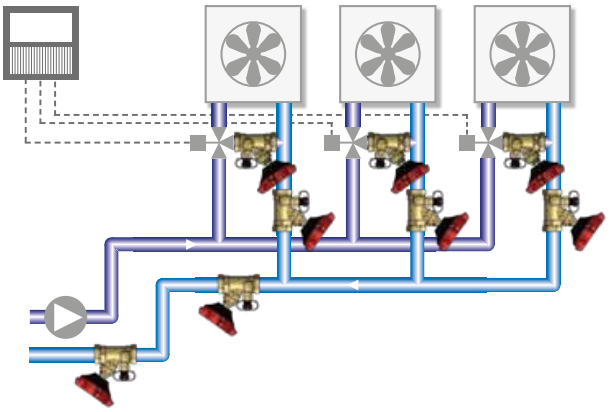

underfloor heating system

The Pegler ProFlow 1260 ensures the required flow distribution to all manifolds in an underfloor heating system. The actuators controlling the two-way valves are connected to a room thermostat or BMS system. By opening or closing the two-way valve in reference to the room temperature the flow in each loop can be controlled, and the required temperature is achieved.

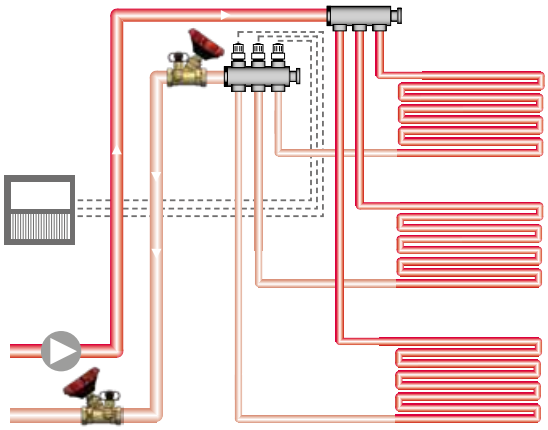

dynamic applications

fan coil system with variable flow

The Pegler ProFlow 1600 or 1500 PICV provides hydronic balancing in variable flow systems in order to ensure the optimum flow is achieved at all load conditions, in the terminal units. The actuator controlling the two-way valve inside the Pegler ProFlow 1600 or 1500 PICV is connected to a room thermostat or a BMS system. By opening or closing the two-way valve in reference to the room temperature, the required temperature is achieved.

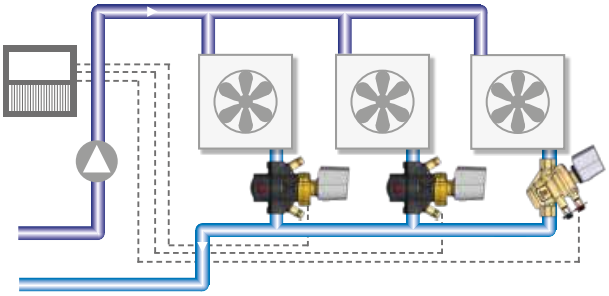

fan coil system with constant flow

The Pegler ProFlow 1600 or 1500 PICV provides hydronic balancing in a constant flow system, equipped with a three-way motorized valve, in order to ensure the optimum flow is achieved at all load conditions, in a fan coil or other terminal unit. In this application temperature control is achieved by the operation of the motorized valve, rather than an actuator, which is connected to a thermostat or BMS system. By the opening or closing of this valve in reference to the room temperature, the required temperature is achieved.

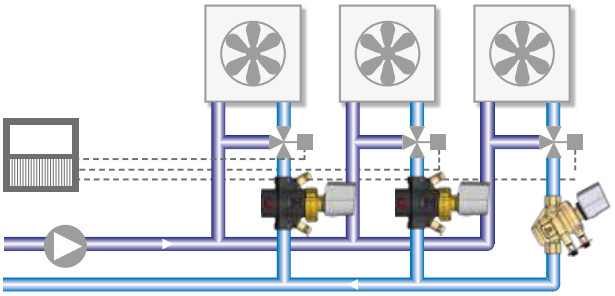

central heating system

The Pegler ProFlow 1600 or 1500 PICV can be installed in a branch of a central heating system with radiators or other terminal units. This ensures that pressure fluctuations from the remaining part of the system will be isolated from the controlled branch, maintaining constant flow. The actuator controlling the two-way valve of the Pegler ProFlow 1600 or 1500 PICV is connected to a thermostat or BMS system. By opening or closing the two-way valve in reference to the room temperature, the required temperature is achieved.

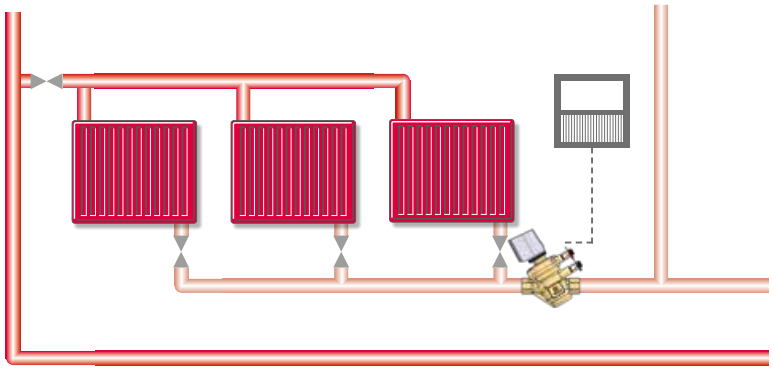

end of line system

The Pegler ProFlow 1600 or 1500 PICV can be used as an end of line valve without the use of an actuator. The Pegler ProFlow 1600 or 1500 PICV can act as a constant flow device to maintain a minimal flow when there is no demand.

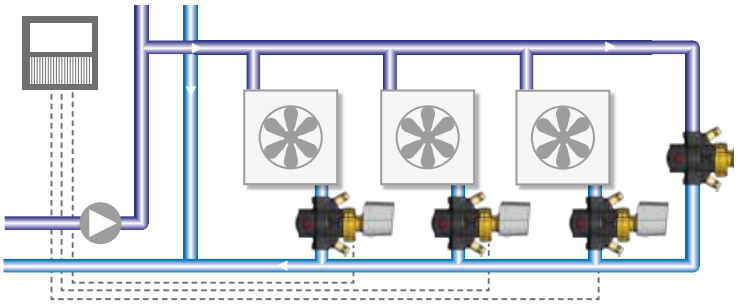

applications

heating installations

Pegler ProFlow Valves are used in heating applications and are suitable for water and other neutral liquids. For media other than water, measuring corrections must be applied

Static balancing

Pegler ProFlow 1260 static balancing valve

connection	female thread
operating temperature	-10°C to +120°C
max. operating pressure	20 bar

Pegler ProFlow PP1260 static balancing valve

connection	VSH PowerPress connectors
operating temperature	-10°C to +120°C
max. operating pressure	16 bar

Pegler ProFlow PS1260 static balancing valve

connection	VSH XPress connectors
operating temperature	-10°C to +110°C
max. operating pressure	16 bar

Pegler ProFlow V955 static balancing valve

connection	flange
operating temperature	-10°C to +120°C
max. pressure	16 bar

Dynamic balancing

Pegler ProFlow 1600 PICV
pressure independent control valve

connection	female thread
operating temperature	-10°C to +90°C
max. operating pressure	16 bar

Pegler ProFlow PS1600 PICV
pressure independent control valve

connection	VSH XPress connectors
operating temperature	-10°C to +90°C
max. operating pressure	16 bar

Pegler ProFlow 1500 PICV
pressure independent control valve

connection	female thread
operating temperature	-10°C to +90°C
max. operating pressure	16 bar

Pegler ProFlow PS1500 PICV
pressure independent control valve

connection	VSH XPress connectors
operating temperature	-10°C to +90°C
max. operating pressure	16 bar

cooling installations

Pegler ProFlow Valves are used for cooling applications and suitable for water and other neutral liquids or water with glycol. For media other than water, measuring corrections must be applied

Static balancing

Pegler ProFlow 1260 static balancing valve

connection	female thread
operating temperature	-10°C to +120°C
max. operating pressure	20 bar

Pegler ProFlow PP1260 static balancing valve

connection	VSH PowerPress connectors
operating temperature	-10°C to +120°C
max. operating pressure	16 bar

Pegler ProFlow PS1260 static balancing valve

connection	VSH XPress connectors
operating temperature	-10°C to +110°C
max. operating pressure	16 bar

Pegler ProFlow V955 static balancing valve

connection	flange
operating temperature	-10°C to +120°C
Max. pressure	16 bar

Dynamic balancing

Pegler ProFlow 1600 PICV
pressure independent control valve

connection	female thread
operating temperature	-10°C to +90°C
max. operating pressure	16 bar

Pegler ProFlow PS1600 PICV
pressure independent control valve

connection	VSH XPress connectors
operating temperature	-10°C to +90°C
max. operating pressure	16 bar

Pegler ProFlow 1500 PICV
pressure independent control valve

connection	female thread
operating temperature	-10°C to +90°C
max. operating pressure	16 bar

Pegler ProFlow PS1500 PICV
pressure independent control valve

connection	VSH XPress connectors
operating temperature	-10°C to +90°C
max. operating pressure	16 bar

technical characteristics

Pegler ProFlow 1260 FODRV

The Pegler ProFlow 1260 valve is suitable for balancing, pre-set adjusted flow, measurement and flow shut off. The body and valve internals of the Pegler ProFlow 1260 are made of dezincification resistant brass CW511L. The valve seat is made out of PTFE. The valve has a non-rising stem and handwheel. The handwheel is made from 30% glass filled PA 66 and has a position indication with 80 setpoints. The valve provides a linear flow characteristic and has a memory stop.
The valve is equipped with two self-sealing test points for flow measurement, which are provided with colour coded caps.

markings

marking on valve body:	pressure rating (PN) and dimension (DN), flow direction
marking on handwheel:	open/close indicator, setpoint indicator

connections

The valve can be supplied with female threaded connections, VSH XPress connections, VSH PowerPress® connections and union connections.

Pegler ProFlow V955 FODRV

The Pegler ProFlowV955 valve is suitable for balancing, pre-set adjusted flow, measurement and flow shut off. The body of the V955 is made of ductile iron EN-GJS-400-15 and the valve internals of the V955 are made of brass and stainless steel. The valve has a non-rising stem and handwheel. The handwheel is made from steel and has position indication with 8 setpoints. The valve is equipped with two self-sealing test points for flow measurement, which are provided with colour coded caps.

markings

marking on valve body:	pressure rating (PN) and dimension (DN), flow direction
marking on handwheel:	open/close indicator, setpoint indicator

connections

The valve is supplied with flanges according to EN1092-2 PN16.

Pegler ProFlow 1600 PICV

The valve is suitable for automatic pressure independent balancing, modulating control, measurement and flow shut off. The body of the Pegler ProFlow 1600 PICV is made of dezincification resistant brass CW511L. The valve internals are made of polyphenylene Sulphide (PPS). The valve is suitable for actuation. The valve has an adjustable a position indication with 10 setpoints. The valve is equipped with two self-sealing test points for flow measurement, which are provided with colour coded caps.

markings

marking on valve body:	pressure rating (PN) and dimension (DN), setpoint indicator, flow
marking on shuttle:	direction symbols for 'flush', 'shut-off' and 'dynamic operation'

connections

The valve can be supplied with female threaded connections, VSH XPress connections, VSH PowerPress® connections and union connections.

Pegler ProFlow 1500 PICV

The valve is suitable for automatic pressure independent balancing, modulating control, measurement and flow shut off. The body of the Pegler ProFlow 1500 PICV is made of dezincification resistant brass CW511L. The valve internals are made of polyphenylene Sulphide (PPS). The valve is suitable for actuation. The valve has an adjustable a position indication with 10 setpoints. The valve is equipped with two self-sealing test points for direct flow measurement, which are provided with colour coded caps.

markings

marking on valve body:	pressure rating (PN) and size (DN), setpoint indicator, flow
markings:	direction symbols for 'flush', 'shut-off' and 'dynamic operation'

connections

The valve can be supplied with female threaded connections, VSH XPress connections and VSH PowerPress® conenctions.

installation guidelines

Pegler ProFlow 1260

Unpack the valve and check that the flow paths and valves are clean and free from debris. Check the body markings and nameplate, where fitted, to ensure that the correct valve has been selected for installation.
n correctly providing
it is fitted so that the fluid transported follows the indicated flow direction.

Pegler ProFlow valves are manufactured to exacting standards and, therefore, should not be subjected to misuse.
The following should be avoided:

- careless handling of the valve (valves should not be lifted using the hand wheel or the stem)
- dirt and debris entering the valve through the end ports
- excessive force during assembly and hand wheel operation

Use suitable hangers close to both ends of the valve in order to remove stresses transmitted by the pipe. Confirm that the pipe threading length is correct to avoid excessive penetration of the pipe into the valve that would otherwise cause damage.

Care should be taken to apply jointing compound to the pipe only and not in the valve threads. Surplus compound will then be forced outwards and will not enter the valve. Overuse of compound can lead to valve failure on the body ends.

Threads should be engaged correctly when tightening the valve onto the pipe. The wrench should always be fitted on the body end adjacent to the joint being made. Severe damage can occur to stems, valves and seats by the use of hand wheels or levers larger than those originally supplied by the manufacturer, and by wheel keys.

Press-fit valves include the VSH XPress connectors and these are bronze and are suitable for copper, stainless steel and carbon steel tube. The joints are of the leak before press type and utilise the M press profile. Full instructions on press jointing are available in the VSH XPress technical manual.

Pegler ProFlow valves are also available with VSH PowerPress® connections, suitable for thick wall steel tube. These connections utilise the DW press profile and are provided with the Leak Before Press function. Full instructions on VSH PowerPress® connections are available in the VSH PowerPress® technical manual.

mounting

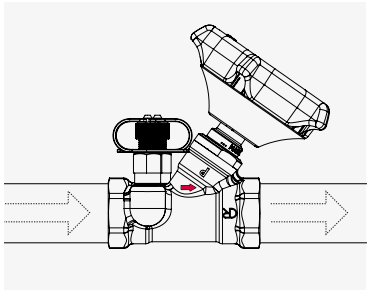

1. an arrow on the Pegler ProFlow 1260 housing indicates the flow direction to be respected.

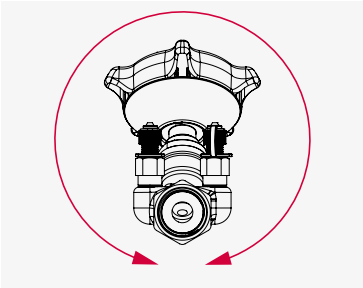

2. the Pegler ProFlow 1260 can be orientated 360° around the pipe axis.

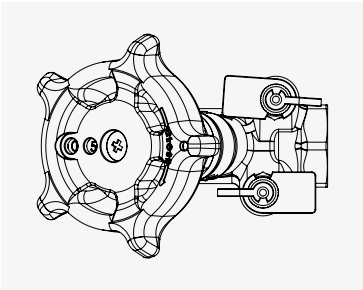

3. no additional space is required for operation of the valve following installation.

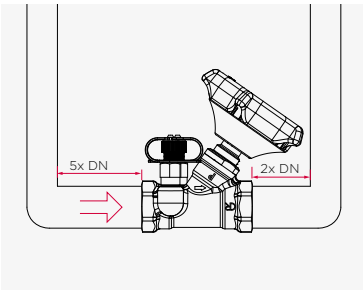

4. 5 x DN straight piping is required before the valve and after any bend and 2 x DN after the valve and before any bend.

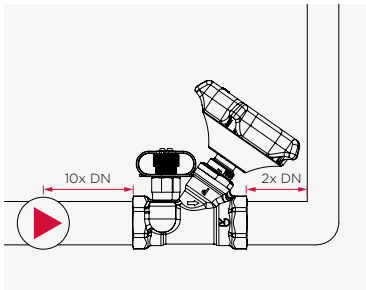

5. 10 x DN straight piping is required when the valve is mounted directly after the system pump and 2 x DN is required after the valve and before any bend.

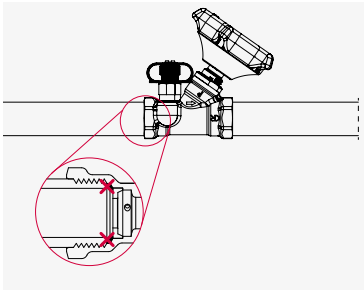

6. loose thread sealant must not hang into the pipe.

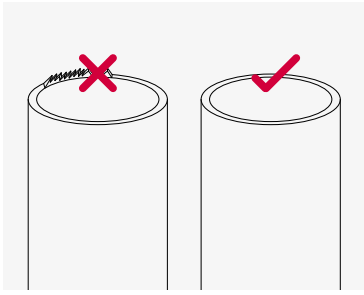

7. deburring of pipe ends is required to prevent system clogging.

8. when installing the Pegler ProFlow PS1260 valves please refer to the VSH XPress technical manual for VSH XPress connection instructions. For Pegler ProFlow PP1260 valves please refer to the VSH PowerPress® technical manual for VSH PowerPress® connection instructions.

valve operation by handwheel

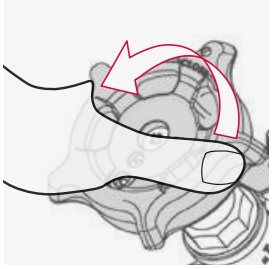

1. Regulation - an anti-clockwise rotation of the handwheel will open the valve. When it will go no further, return the handwheel clockwise ½ turn.

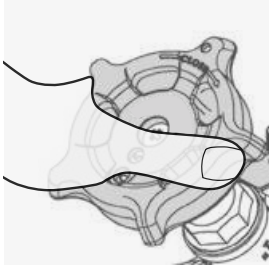

2. when using the Pegler ProFlow 1260, the valve should always be in a fully open position prior to system flushing or commissioning.

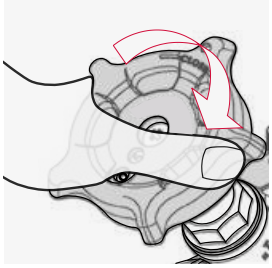

3. to close the valve - a clockwise rotation of the handwheel will close the valve. Closure will be confirmed when the handle can be turned no further.

position and locking settings

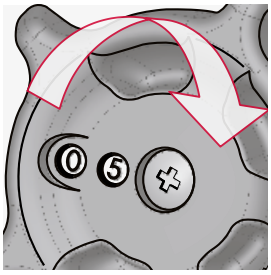

4. Adjust to the desired flow rate, the Pegler ProFlow 1260 valves have a visible position indicator set into the valves handwheel. This allows for regulation positions (00 to 79)

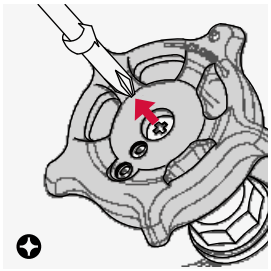

5. remove screw in order to access the allen key socket.

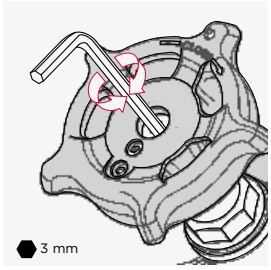

6. use an allen key to secure the mechanism in the handle, this locks the set point position. When the valve is closed in its isolating position the valve can be reopened to the previous set point to avoid further costly commissioning. Then return screw back into position.

Pegler ProFlow V955

Unpack the valve and check that the flow paths and valve are clean and free from debris. Check the body markings and nameplate, where fitted, to ensure that the correct valve has been selected for installation.

Before valve installation the pipe work to which the valve is to be connected should be inspected for cleanliness and freedom from debris. The valve is marked with a directional flow arrow on the body. The valve will function correctly providing it is fitted so that the fluid transported follows the indicated flow direction. Ensure that any flange protectors are removed.

Ensure that the valve is fully open during installation. Flange components have their own design limitations and correct selection and compatibility is vital.

Pegler ProFlow valves are manufactured to exacting standards and, therefore, should not be subjected to misuse. The following should be avoided:

- careless handling of the valve
- dirt and debris entering the valve through the end ports
- excessive force during assembly and operation

flange connection

- pressure and temperature must not exceed its rating.
- gasket selection must be in line with the rating of the flange
- the fluid being handled will affect the gasket selection.
- all bolts must be compatible with the mating flange being used.
- pipe and its mating flange should be cleaned and made ready for assembly.
- a clean and appropriate gasket should be selected for the flange type being used.
- flat face and raised faces flanges should not be mixed.
- piping should be properly supported with the use of correctly sized hanging or securing brackets.
- all pipes need to be aligned correctly to ensure that the valve integrity is maintained, avoiding twisting and distortion of the valves structure and valve damage.
- as the valve is assembled in the pipeline ensure that the bolts are placed and secured with nuts at hand tightness employing the crossover method of tightening to secure a sound and leak tight joint.
- double regulating balancing valves provide positive shut off but when installing the valve respect for the flow direction must be made as indicated by the body arrow.
- use suitable hangers close to both ends of the valve in order to remove stresses transmitted by the pipe.

mounting

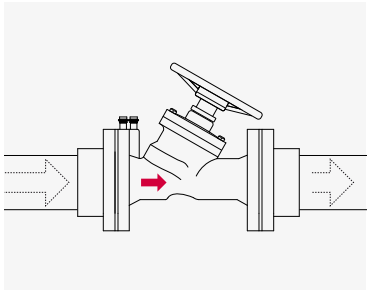

1. an arrow on the Pegler ProFlow V955 housing indicates the flow direction to be respected.

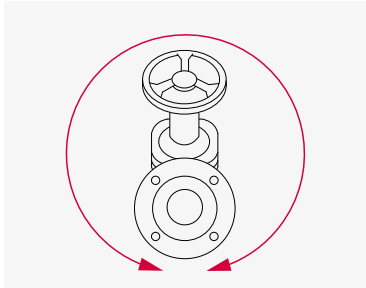

2. the Pegler ProFlow V955 can be orientated 360° around the pipe axis.

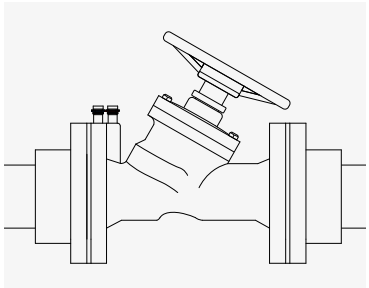

3. no additional space is required for operation of the valve following installation.

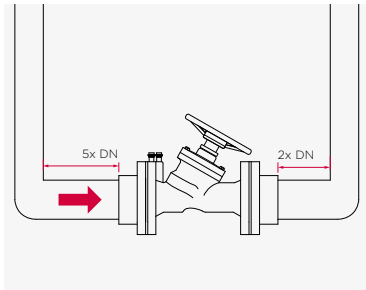

4. 5 x DN straight piping is required before the valve and after any bend and 2 x DN after the valve and before any bend.

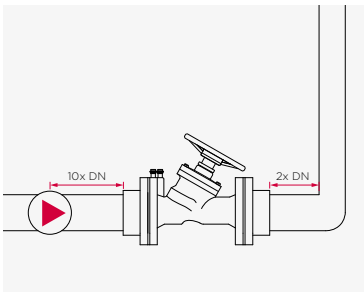

5. 10 x DN straight piping is required when the valve is mounted directly after the system pump and 2 x DN is required after the valve and before any bend.

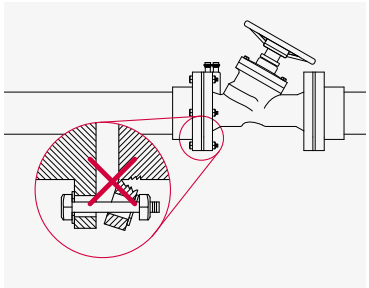

6. it is important to ensure that flange faces are seated against each other before tightening, use of the flange bolts to pull the two faces together can result in damaged flanges.

operation

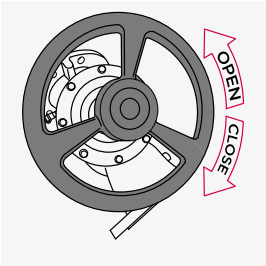

1. to open – an anti clockwise rotation of the hand wheel will open the valve. When it will go no further then rotate the hand wheel clockwise a ½ turn.
to close - a clockwise turn of the hand wheel. Closure will be confirmed when the handle can be turned no further.

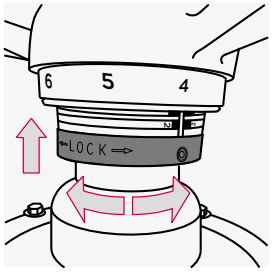

3. adjust to the desired flow rate, Then lift up the collar and align to cross section.

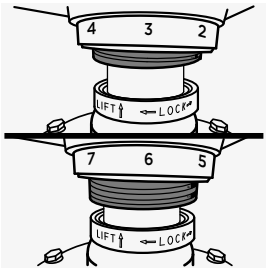

2. regulating positions are readable on the scale counter on the valve stem as the valve handle is turned to achieve a set flow rate.
Suitable hand protection should be worn when operating valves used in extreme temperature applications.

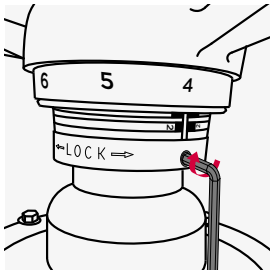

4. simply tighten the collar using an allen key, The Pegler ProFlow V955 will be locked in position.

Pegler ProFlow 1600 PICV

Unpack the valve and check that the flow paths and valve threads are clean and free from debris. Check the body markings and nameplate, where fitted, to ensure that the correct valve has been selected for installation.

Before valve installation the pipe work to which the valve is to be connected should be inspected for cleanliness and freedom from debris. The valve is marked with a directional flow arrow on the body. The valve will function correctly providing it is fitted so that the fluid transported follows the indicated flow direction.

Pegler ProFlow valves are manufactured to exacting standards and, therefore, should not be subjected to misuse.
The following should be avoided:

- careless handling of the valve
- dirt and debris entering the valve through the end ports
- excessive force during assembly and operation

Use suitable hangers close to both ends of the valve in order to remove stresses transmitted by the pipe. Confirm that the pipe threading length is correct to avoid excessive penetration of the pipe into the valve that would otherwise cause damage.
Care should be taken to apply jointing compound to the pipe only and not in the valve threads. Surplus compound will then be forced outwards and will not enter the valve. Overuse of compound can lead to valve failure on the body ends.

Threads should be engaged correctly when tightening the valve onto the pipe. The wrench should always be fitted on the body end adjacent to the joint being made. Severe damage can occur to stems, valves and seats by the use of hand wheels or levers larger than those originally supplied by the manufacturer, and by wheel keys.

Press-fit valves include the VSH XPress connectors and these are bronze and are suitable for copper tube, stainless steel and carbon steel tube. The joints are of the leak before press type and utilise the M press profile. Full instructions are on press jointing are available in the VSH XPress technical manual.

mounting

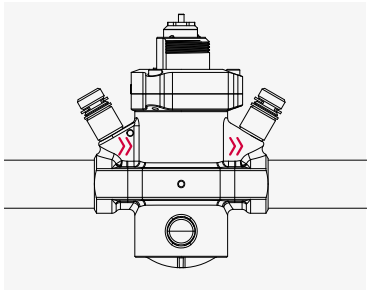

1. an arrow on the Pegler ProFlow 1600 PICV housing indicates the flow direction to be respected.

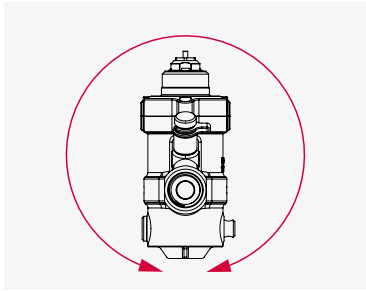

2. the Pegler ProFlow 1600 PICV can be orientated 360° around the pipe axis.

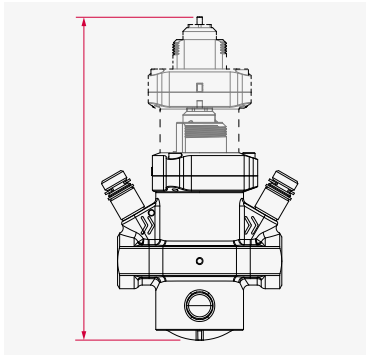

3. additional space is required for the isolate and bypass modes and to allow installation of an actuator following commissioning.

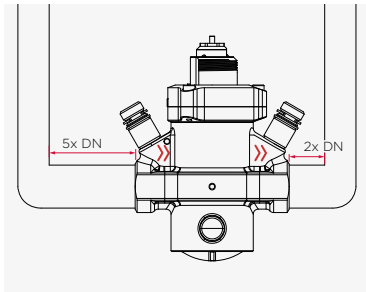

4. 2 x DN straight piping is required before the valve and after any bend and 2 x DN after the valve and before any bend.

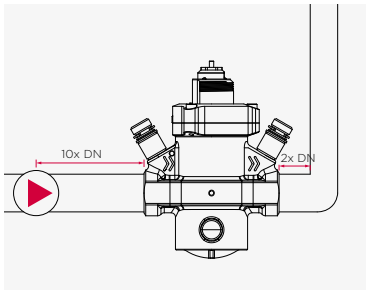

5. 10 x DN straight piping is required when the valve is mounted directly after the system pump and 2 x DN is required after the valve and before any bend.

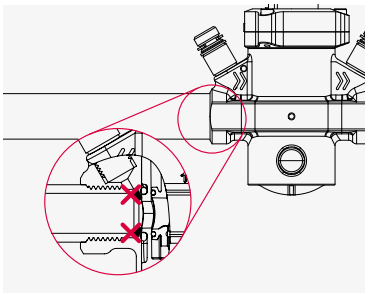

6. loose thread sealant must not hang into the pipe.

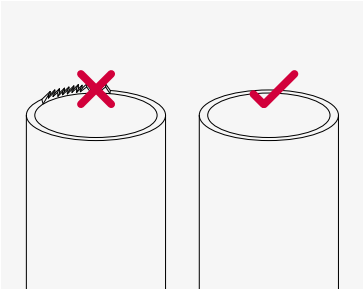

7. deburring of pipe ends is required to prevent system clogging.

8. when installing Pegler ProFlow PS1600 PICV valves please refer to the VSH XPress technical manual for VSH XPress connection instructions.

operation for **system flushing**

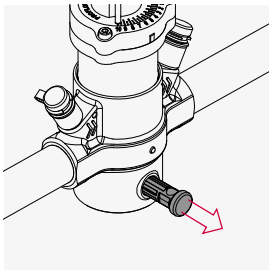

1. the Pegler ProFlow 1600 PICV valve is supplied in bypass position. After installation it should remain in this position until all system flushing operations are completed. Then follow the steps detailed below to enable the dynamic balancing mode, commission and verify the valve.

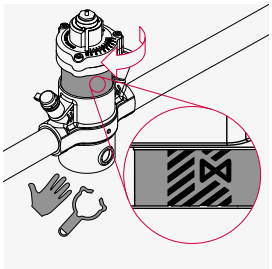

2. to activate the operational mode remove the locking pin. By turning the head clockwise the exposed shuttle markings will demonstrate the isolation mode, the isolation function is active when the isolation symbol is fully visible and the bypass symbol is hidden.

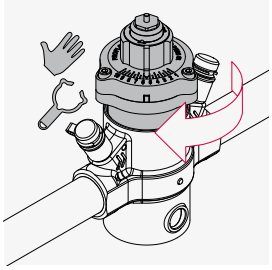

3. continue the clockwise motion until the head goes no further, at this point the Pegler ProFlow 1600 PICV will activate into the operational mode. This can be completed by hand or with the use of an operational tool (see accessories).

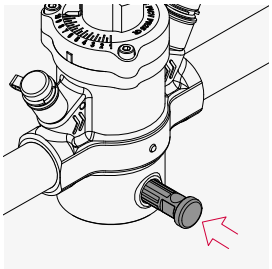

4 important note. The locking pin must be re inserted to ensure anti tamper and security.

caution. Suitable hand protection should be worn when operating valves used in extreme temperature applications.

commissioning steps for **regulation**

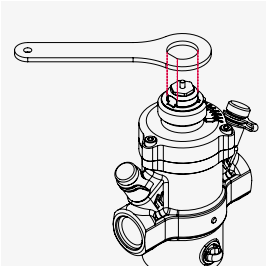

1. Using a setting tool, the spindle can be rotated clockwise and counterclockwise to achieve the desired setting point. (see accessories on page 68 for tool)

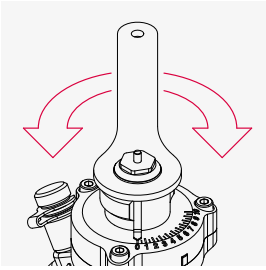

2. the Pegler ProFlow 1600 PICV valve has a visible position indicator displayed on the head of the valve, which is visible both with and without an actuator installed.

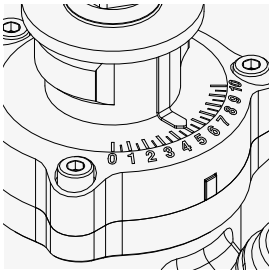

3. the setting indicator allows for accurate positioning from 0 to 10, the clear markings remain in position and preserves the flow setting of the valve even when in isolation or bypass mode, avoiding further costly time on re commissioning and maintenance.

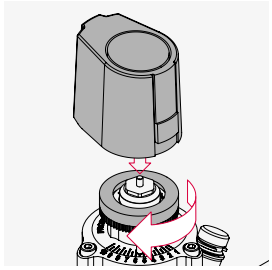

4. screw the adapter ring onto the valve and fit the thermal head onto it. Rotate the lower ring until you hear a click.

There is no need for adapters when the valve and actuator match M30 x 1.5 threads.

Pegler ProFlow 1500 PICV

Unpack the valve and check that the flow paths and valve threads are clean and free from debris. Check the body markings and nameplate, where fitted, to ensure that the correct valve has been selected for installation.

The 1500 PICV DN32, DN40, and DN50 valves are delivered without the mounted indicator to facilitate cartridge removal during flushing. The indicator is provided separately and should be mounted after flushing and before commissioning.
Ensure correct mounting with grab ring facing the flat side of the cartridge's head. The flushing plug can help push the positioning ring down.

Before valve installation the pipe work to which the valve is to be connected should be inspected for cleanliness and freedom from debris. The valve is marked with a directional flow arrow on the body. The valve will function correctly providing it is fitted so that the fluid transported follows the indicated flow direction.

Pegler ProFlow valves are manufactured to exacting standards and, therefore, should not be subjected to misuse.
The following should be avoided:

- careless handling of the valve
- dirt and debris entering the valve through the end ports
- excessive force during assembly and operation

Use suitable hangers close to both ends of the valve in order to remove stresses transmitted by the pipe. Confirm that the pipe threading length is correct to avoid excessive penetration of the pipe into the valve that would otherwise cause damage.
Care should be taken to apply jointing compound to the pipe only and not in the valve threads. Surplus compound will then be forced outwards and will not enter the valve. Overuse of compound can lead to valve failure on the body ends.

Threads should be engaged correctly when tightening the valve onto the pipe. The wrench should always be fitted on the body end adjacent to the joint being made. Severe damage can occur to stems, valves and seats by the use of hand wheels or levers larger than those originally supplied by the manufacturer, and by wheel keys.

Press-fit valves include the VSH XPress connectors and these are Gunmetal and are suitable for copper tube, stainless steel and carbon steel tube. The joints are of the leak before press type and utilise the M press profile. Full instructions are on press jointing are available in the VSH XPress technical manual.

mounting

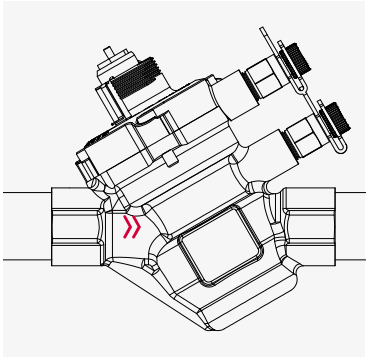

1. an arrow on the Pegler ProFlow 1500 PICV housing indicates the flow direction to be respected

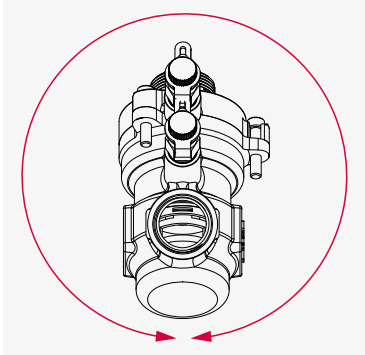

2. the Pegler ProFlow 1500 PICV can be installed in any orientation

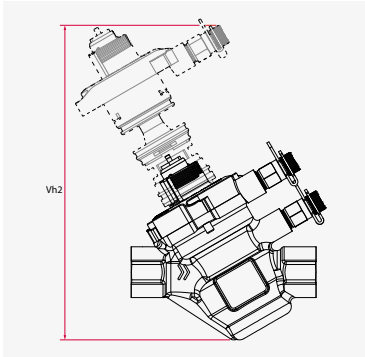

3. additional space is required to remove the cartridge for flushing and for installing an actuator.

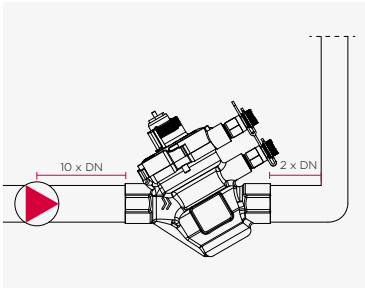

4. 10 x DN straight piping is required when the valve is mounted directly after the system pump

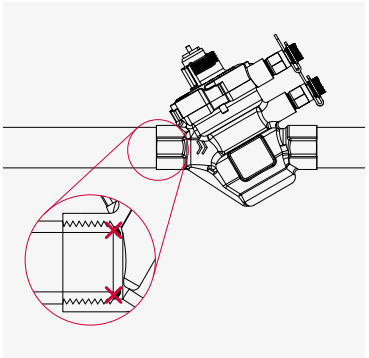

5. 10 x DN straight piping is required when the valve is mounted directly after the system pump and 2 x DN is required after the valve and before any bend

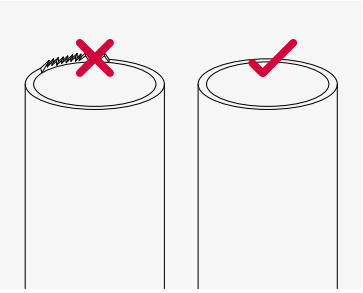

6. deburring of pipe ends is required to prevent system clogging

7. when installing Pegler ProFlow PS1500 PICV valves please refer to the VSH XPress technical manual for VSH XPress connection instructions

Pegler ProFlow 1500 DN15, DN20 and DN25

operation for **system flushing**

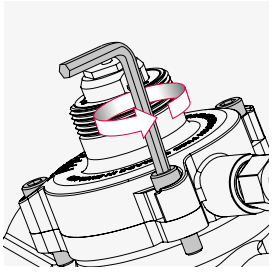

1. loosen (do not remove) cap bolts with Allen Key. Turn anti-clockwise to release.

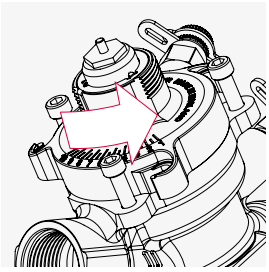

2. rotate the cap head anti-clockwise so free from bolts.

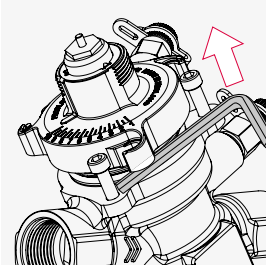

3. use Allen key as leverage to pop cap upwards.

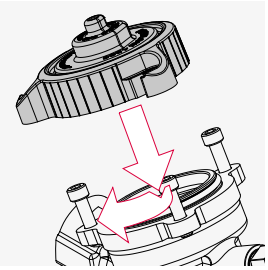

4. fit flushing cap, turn clockwise. engage bolts.

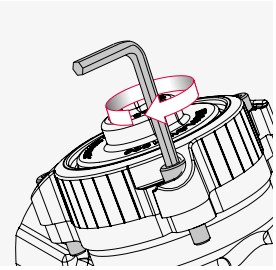

5 tighten cap bolts with Allen Key.

6. Tighten bolts with an Allen key to the below torque: DN15 and DN20: 1 – 3 Nm, DN25: 4 – 6 Nm. Valve is ready for flushing.

commissioning steps for **regulation**

1. turn clockwise to increase flow. Turn anti-clockwise to decrease flow. Use the cap to turn the axis

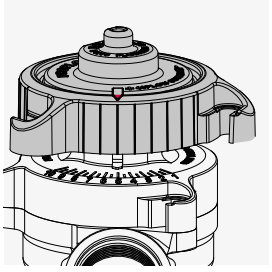

2. set the flow rate using the indicator on the flushing cap.

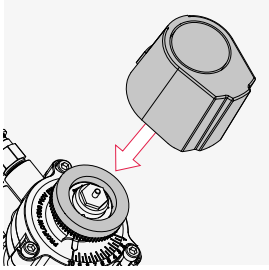

3. install the actuator (using its provided instructions) and any relevant adaptors.

note: the thread on the Pegler ProFlow 1500 PICV is M30 x 1.5.

Pegler ProFlow 1500 DN32, DN40 and DN50

operation for **system flushing**

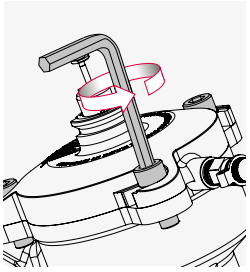

1.* loosen (do not remove) cap bolts with Allen Key. Turn anti-clockwise to release.

* if firm, use spanner between test points to start the rotation

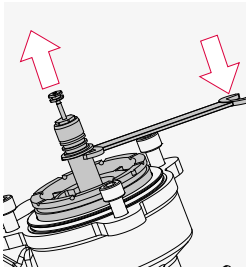

2. carefully lever cartridge up with an appropriate spanner. Keep it clean.

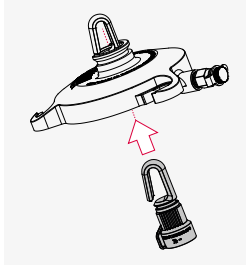

3 insert flushing plug.

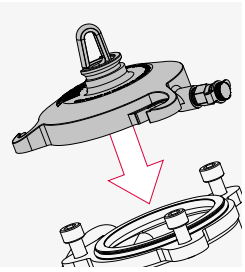

4. fit cap, turn clockwise, engage bolts.

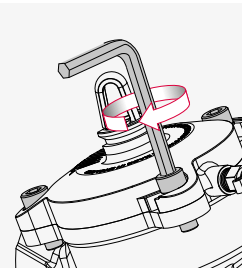

5. tighten bolts bolts with an Allen Key to a torque between 4-6 Nm. Valve is ready for flushing.

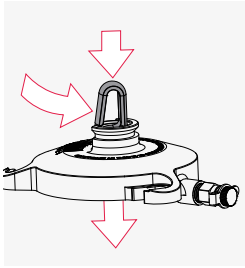

6. remove cap from body after flushing. Remove plug from cap.

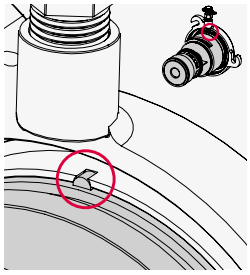

7 refit cartridge into cap. Ensure pip is aligned correctly and cartridge is clean.

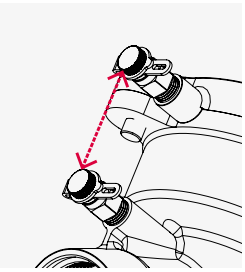

8. refit cap and cartridge into body. Ensure test points are aligned. Tighten to a torque between 4-6 Nm.

commissioning steps **for regulation**

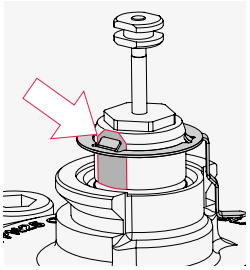

1. align indicator on cartridge.

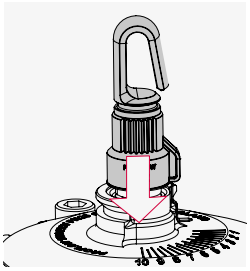

2. use flushing plug to push indicator into place.

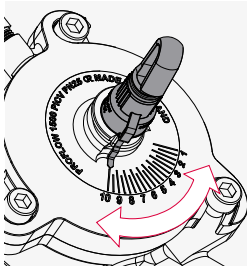

3. turn clockwise to increase flow, turn anti-clockwise to decrease flow. Use the plug to turn the axis.

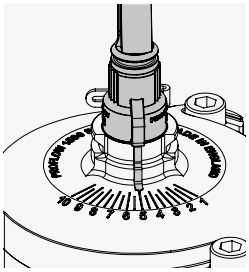

4. set the flow rate using the indicator on the flushing plug.

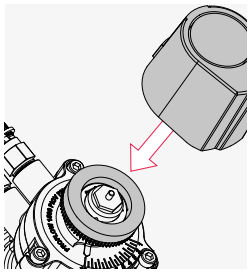

5. install the actuator (using its provided instructions) and any relevant adaptors

note: the thread on the Pegler ProFlow 1500 PICV is M30 x 1.5

Pegler ProFlow BC3 balancing computer

handle position: measure

handle position: zero

Verification of flow can be done using a suitable flow measurement device and utilising the built-in test points on the valve. The Pegler ProFlow BC3 balancing computer is supplied with pre-programmed loss coefficient data (Kvs values) allowing a direct measurement of flow rate to be obtained, ensuring the system is balanced correctly to achieve optimum efficiency.
To download the app search for Pegler ProFlow BC3 on either Google Play or the App Store.

connecting the Pegler ProFlow BC3 balancing computer

1. connect the hoses to the valve using needle connectors (included).

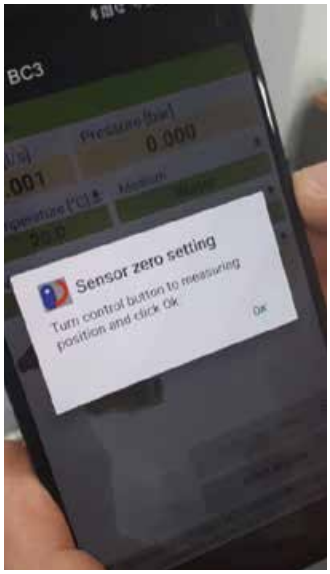

2. zero the flow meter and bleed air from the hoses. *(See handle positions top right).

3. select the valve (where valve data is not available, a direct Kv can be used for verification, found in the options menu).

All Pegler ProFlow 1600 PICV products have been included as best practice, the differential pressure working range will be the same throughout the selection, and the Pegler ProFlow BC3 will verifiy this.

results for the Pegler ProFlow 1260 and V955

Flow through the valve is calculated and displayed live on the mobile device screen.

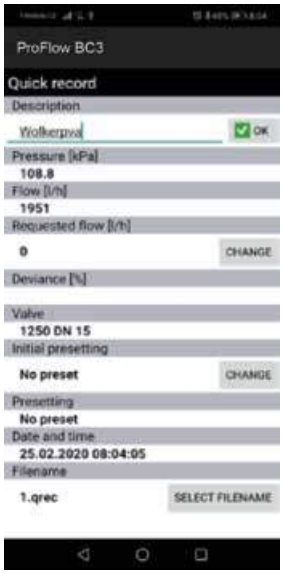

Readings can be saved via the quick records option for ease.

results for the Pegler ProFlow 1600 PICV

live view

The app will display the live pressure loss across the Pegler ProFlow 1600 PICV valve. This can be used to verify the valve is within the working range as shown on the supplied charts, and will be providing a stable flow.

quick reference

The app also provides a quick reference for the Pegler ProFlow 1600 PICV published flow data, the sliding bar confirms the setting point against the required flow rate (please note this is for reference only).

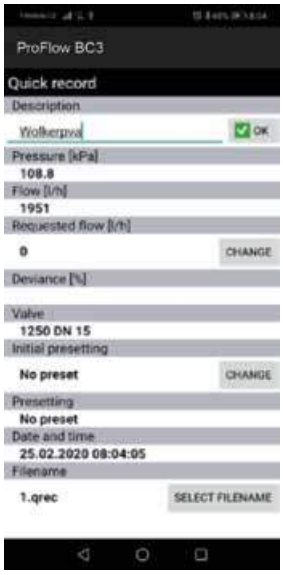

Readings can be saved via the quick records option for ease.

how to use tables and charts

valve sizing and selection

Each balancing valve needs to be sized correctly for optimising the distribution of water in a building's hydronic heating or cooling system, to provide the intended indoor climate at optimum energy efficiency and minimal operating costs. There are multiple options to choose the correct valve size.

valve selection by calculating Kv value

The correct valve size for the Pegler ProFlow 1260 static commissioning valves can be obtained by calculating the Kv value by the following formula:

$$Kv = 36 \frac{Q}{\sqrt{\Delta p}}$$

Q = flow [l/s]
Δp = pressure loss [kPa]
Kv = valve coefficient [m^3/h]

Once the Kv value is calculated the corresponding valve size can be found in the table below.

example 1:

required flow (Q):	0.15 l/s
required pressure drop:	29 kPa
calculated Kv value:	1.0

In the table you will find this Kv value in several places: DN20 standard flow with a presetting of 4.0, DN15 standard flow with a presetting of 4.3 and DN15 medium flow at a presetting of 7.1. It's recommended to use the smallest DN size with medium presetting, in this case DN15 standard flow with prestting 4.3. The tube size can give preferance to use the DN20 standard flow valve. The relevant Kv values and presettings are highlighted in the table.

example 2:

required flow [Q]:	0.055 l/s
required pressure drop:	10 kPa
calculated Kv value:	0.63

In the table you will find DN20 standard flow with a presetting of 2.0, DN15 standard flow with a presetting of 2.4 and DN15 medium flow at a presetting of 5.2. It's recommended to use the smallest DN size with medium presetting, in this case DN15 medium flow.

presetting table Kvs and Kv values

	DN15 ultra low flow (ULF)	DN15 low flow (LF)	DN15 medium flow (MF)	DN15 standard flow (SF)	DN20 standard flow (SF)	DN25 standard flow (SF)	DN32 standard flow (SF)	DN40 standard flow (SF)	DN50 standard flow (SF)
	Kvs 0.25	Kvs 0.49	Kvs 0.98	Kvs 2.02	Kvs 4.43	Kvs 6.07	Kvs 11.10	Kvs 22.26	Kvs 42.46
Pre-set	Kv	Kv	Kv	Kv	Kv	Kv	Kv	Kv	Kv
1.2	0.04	0.08	0.15	0.43	0.49	0.91	0.73	2.43	2.92
1.3	0.04	0.09	0.16	0.45	0.50	0.97	1.93	2.71	3.17
1.4	0.04	0.09	0.17	0.47	0.52	1.02	2.12	2.99	3.42
1.5	0.05	0.10	0.18	0.48	0.54	1.08	2.32	3.27	3.67
1.6	0.05	0.11	0.18	0.50	0.56	1.14	2.52	3.54	3.92
1.7	0.05	0.11	0.19	0.52	0.58	1.20	2.71	3.82	4.17
1.8	0.05	0.12	0.20	0.53	0.59	1.26	2.91	4.10	4.42
1.9	0.05	0.12	0.20	0.53	0.59	1.26	2.91	4.10	4.42
2.0	0.06	0.13	0.22	0.57	0.63	1.37	3.31	4.65	4.93
2.1	0.06	0.14	0.23	0.58	0.65	1.43	3.51	4.93	5.18
2.2	0.07	0.15	0.24	0.60	0.66	1.49	3.70	5.21	5.43
2.3	0.07	0.15	0.25	0.62	0.68	1.55	3.90	5.49	5.68
2.4	0.07	0.16	0.26	0.63	0.70	1.60	4.10	5.77	5.93
2.5	0.07	0.17	0.27	0.65	0.72	1.66	4.30	6.05	6.18
2.6	0.08	0.17	0.28	0.67	0.74	1.72	4.50	6.33	6.44
2.7	0.08	0.18	0.28	0.68	0.75	1.78	4.70	6.61	6.69
2.8	0.08	0.19	0.29	0.70	0.77	1.84	4.90	6.89	6.94
2.9	0.08	0.20	0.30	0.72	0.79	1.89	5.10	7.17	7.19
3.0	0.09	0.20	0.31	0.74	0.81	1.95	5.30	7.45	7.44
3.1	0.09	0.21	0.32	0.75	0.83	2.01	5.50	7.74	7.70
3.2	0.09	0.22	0.33	0.77	0.84	2.07	5.70	8.02	7.95
3.3	0.10	0.22	0.34	0.79	0.86	2.13	5.90	8.31	8.20
3.4	0.10	0.23	0.35	0.80	0.88	2.19	6.10	8.59	8.45
3.5	0.10	0.24	0.36	0.82	0.90	2.24	6.30	8.88	8.71
3.6	0.10	0.24	0.37	0.84	0.92	2.30	6.51	9.16	8.96
3.7	0.11	0.25	0.38	0.85	0.93	2.36	6.71	9.45	9.21
3.8	0.11	0.26	0.38	0.87	0.95	2.42	6.91	9.73	9.47
3.9	0.11	0.26	0.39	0.89	0.97	2.48	7.11	10.01	9.72
example 2 4.0	0.11	0.27	0.40	0.90	0.99	2.54	7.31	10.30	9.97

	DN15 ultra low flow (ULF)	DN15 low flow (LF)	DN15 medium flow (MF)	DN15 standard flow (SF)	DN20 standard flow (SF)	DN25 standard flow (SF)	DN32 standard flow (SF)	DN40 standard flow (SF)	DN50 standard flow (SF)
	Kvs 0.25	Kvs 0.49	Kvs 0.98	Kvs 2.02	Kvs 4.43	Kvs 6.07	Kvs 11.10	Kvs 22.26	Kvs 42.46
Pre-set	Kv	Kv	Kv	Kv	Kv	Kv	Kv	Kv	Kv
4.1	0.12	0.28	0.42	0.94	1.04	2.63	7.46	10.62	10.45
4.2	0.12	0.29	0.44	0.97	1.10	2.72	7.60	10.94	10.93
example 2 4.3	0.13	0.29	0.46	1.00	1.15	2.81	7.75	11.27	11.41
4.4	0.13	0.30	0.48	1.04	1.20	2.90	7.89	11.59	11.89
4.5	0.14	0.31	0.50	1.07	1.26	2.99	8.04	11.91	12.37
4.6	0.14	0.32	0.52	1.10	1.31	3.09	8.18	12.23	12.85
4.7	0.15	0.32	0.54	1.14	1.37	3.18	8.33	12.56	13.33
4.8	0.15	0.33	0.56	1.17	1.42	3.27	8.48	12.88	13.81
4.9	0.16	0.34	0.57	1.20	1.47	3.36	8.62	13.20	14.29
5.0	0.16	0.35	0.59	1.24	1.53	3.45	8.77	13.52	14.77
5.1	0.16	0.36	0.61	1.27	1.58	3.54	8.91	13.86	15.26
example 1 5.2	0.17	0.36	0.63	1.31	1.64	3.64	9.06	14.19	15.74
5.3	0.17	0.37	0.65	1.34	1.69	3.73	9.21	14.52	16.23
5.4	0.18	0.38	0.67	1.37	1.75	3.82	9.36	14.86	16.72
5.5	0.18	0.39	0.69	1.41	1.80	3.91	9.51	15.19	17.21
5.6	0.19	0.40	0.71	1.44	1.86	4.01	9.65	15.52	17.69
5.7	0.19	0.40	0.73	1.47	1.91	4.10	9.80	15.86	18.18
5.8	0.20	0.41	0.75	1.51	1.96	4.19	9.95	16.19	18.67
5.9	0.20	0.42	0.77	1.54	2.02	4.29	10.10	16.52	19.16
6.0	0.20	0.43	0.78	1.58	2.07	4.38	10.24	16.85	19.64
6.1	0.21	0.44	0.81	1.61	2.13	4.47	10.40	17.20	20.14
6.2	0.21	0.44	0.82	1.64	2.18	4.57	10.55	17.55	20.64
6.3	0.22	0.45	0.84	1.68	2.24	4.66	10.70	17.90	21.14
6.4	0.22	0.46	0.86	1.71	2.29	4.76	10.85	18.24	21.64
6.5	0.23	0.47	0.88	1.75	2.35	4.85	11.00	18.59	22.14
6.6	0.23	0.48	0.90	1.78	2.41	4.95	11.15	18.94	22.63
6.7	0.24	0.48	0.92	1.81	2.46	5.04	11.30	19.28	23.13
6.8	0.24	0.49	0.94	1.85	2.52	5.13	11.45	19.63	23.63
6.9	0.25	0.50	0.96	1.88	2.57	5.23	11.60	19.98	24.13
7.0	0.25	0.51	0.98	1.92	2.63	5.32	11.75	20.32	24.63
7.1	0.25	0.52	1.00	1.95	2.68	5.42	11.90	20.69	25.14
7.2	0.26	0.52	1.02	1.99	2.74	5.52	12.06	21.05	25.65
7.3	0.26	0.53	1.04	2.02	2.79	5.61	12.21	21.41	26.16
7.4	0.27	0.54	1.06	2.06	2.85	5.71	12.37	21.77	26.67
7.5	0.27	0.55	1.08	2.09	2.90	5.81	12.52	22.13	27.18
7.6	0.27	0.55	1.08	2.09	2.96	5.90	12.67	22.49	27.68
7.7	0.27	0.55	1.08	2.09	3.02	6.00	12.83	22.49	28.19
7.8	0.27	0.55	1.08	2.09	3.07	6.10	12.98	22.49	28.19
7.9	0.27	0.55	1.08	2.09	3.07	6.19	13.13	22.49	28.19

checking flow rate using the flow signal chart

It is recommended, when using the orifice plate in the Pegler ProFlow 1260 valves to measure flow rate or to set the valve, to use a manometer or electronic flow computer that can instantly convert the Kvs value into a live flow rate.
If the device being used does not have this functionality, the charts below can be used to determine the flow rate or signal.

for checking the flow rate follow the steps below:

- record the signal measured from the orifice plate in kPa (convert if necessary). In the example below the signal is 5kPa.
- identify the class of valve. In the example below this is a DN15 medium flow (DN15 MF) valve.
- draw a horizontal line from the measured signal to the line for the class of valve being measured.
- draw a vertical line down to the x-axis from where the horizontal line meets the valve line.
- read the flow rate from where the vertical line crosses the x-axis. This is 220 l/h, the current flow rate in the valve.

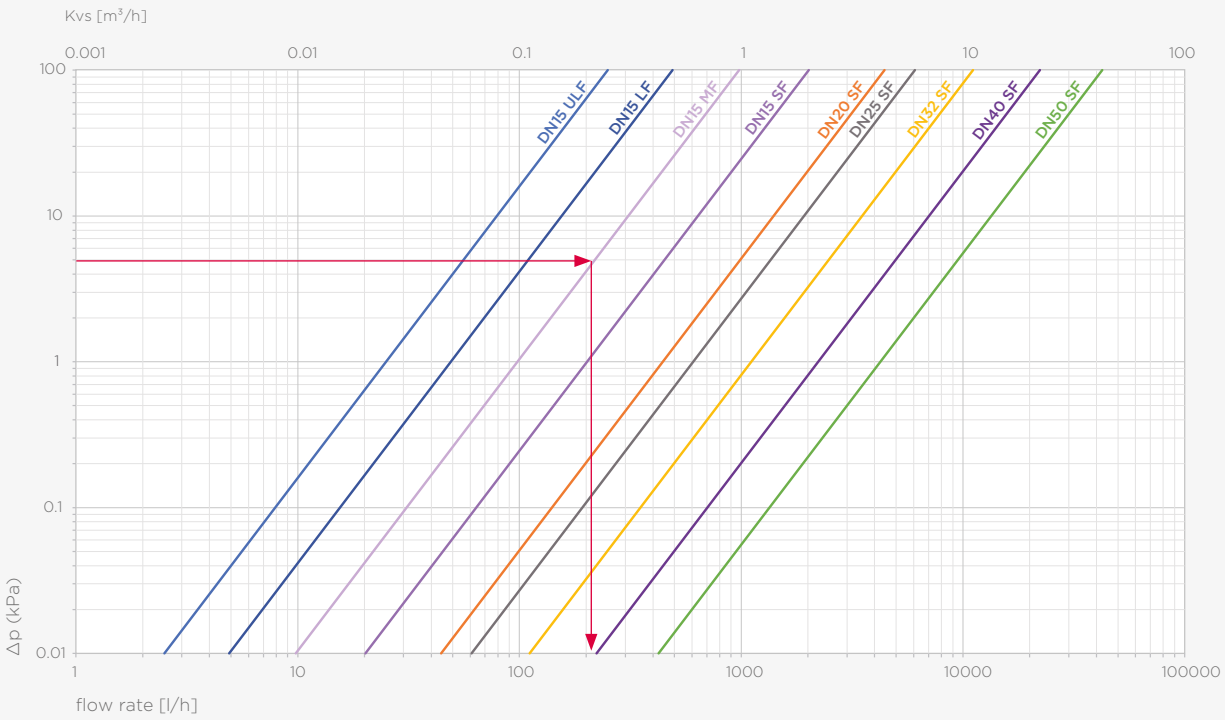

Pegler ProFlow 1260 flow data signal

identifying the target signal using a known flow rate.

If the target flow rate is known and the valve needs commissioning then the target orifice plate signal can be determined.

this can be done by using the method below:

- draw a vertical line up from the target flow rate on the x-axis until it meets the line for the valve to be set. The example below shows a 100 l/h flow rate requirement for a DN15 low flow (DN15 LF) valve.
- draw a horizontal line from where the vertical line meets the valve line to the y-axis.
- read the value where this line meets the y-axis. In the example below this is 4.2 kPa, the signal value the valve needs to be set to.

Connect a manometer to the valve and adjust the handle until the signal matches the value identified from the chart, then set this valve to the desired flow rate.

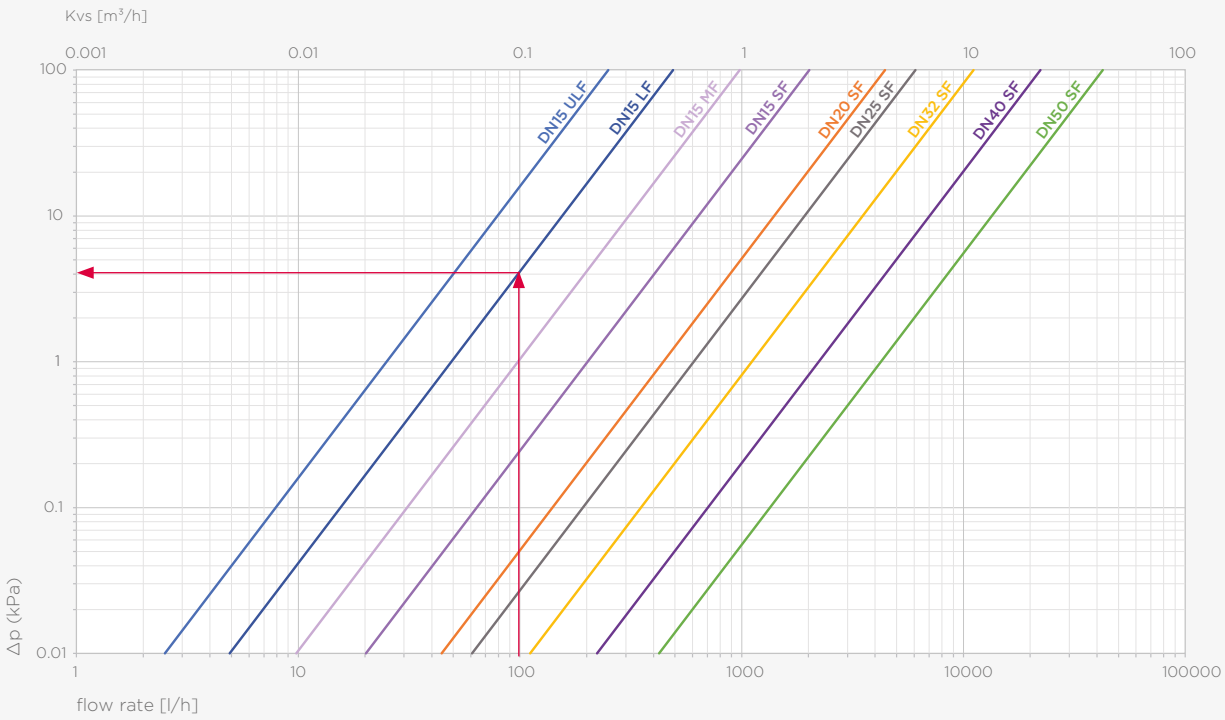

Pegler ProFlow 1260 flow data signal

valve size selection by a design flow rate chart

The correct valve size can be obtained for the Pegler ProFlow 1260 static commissioning valves by using the flow rate chart below:

example:

required flow:	0.07 l/s = 252 l/h
allowable pressure drop:	10 kPa

for selecting a valve by a design flow rate chart follow the steps below:

- draw a vertical line up from the desired flow rate.
- where the line meets the solid coloured bar, this indicates the suitable valve which has a maximum pressure loss and signal less than 5 kPa.
- where the line crosses a hatched bar this indicates the valve is suitable if an increased pressure loss and signal of up to 10 kPa is acceptable.
- it is recommended to select a valve using the solid coloured bar where possible, as it will provide more accuracy and noise reduction. In some cases however, the hatched bar area may offer a chance to downsize the valve, which may save installation costs.

In the example below the red line is drawn up from the desired flow rate (0.07 l/s) and crosses the solid bar of the DN15 standard flow and the hatched bar of the DN15 medium flow. In this example a pressure loss of 10 kPa is allowed so either valve could be selected. As both valves are DN15 it is recommended to select the DN15 standard flow as it crosses the solid section of the bar.

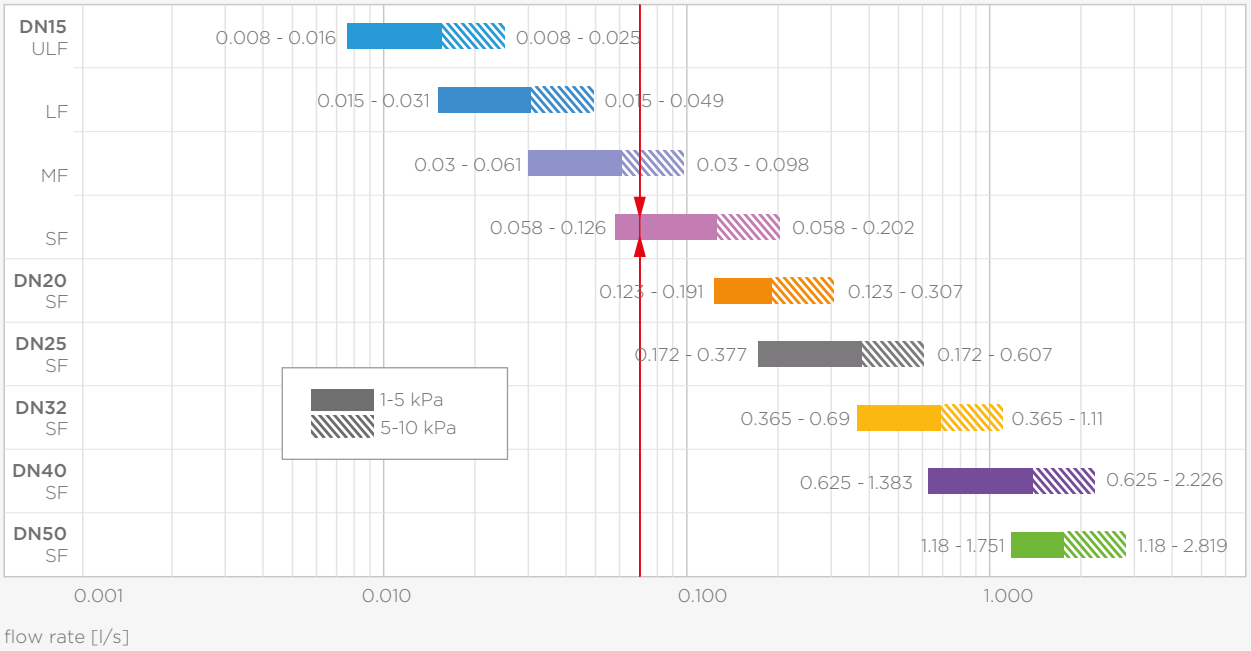

Pegler ProFlow 1260 design flow rate chart

using pre-setting data

The charts are provided for pre-setting verification and can be found in the Pegler ProFlow balancing charts booklet. Here is an example how to utilize the published charts and how to verify the flow rate when using a balancing computer.

example

required flow:	0.15 l/s (vertical line)
required pressure drop:	29 kPa (horizontal line)
setting:	4.0 (intersection of both lines)

In case of overlap it's recommended to use the smallest DN size.

All presetting charts can be found in the Pegler ProFlow balancing charts booklet.

flow measuring

Verification of flow can be measured using a suitable flow measurement device on the valves test points. The Pegler ProFlow BC3 balancing computer is pre-programmed with loss coefficient data (Kvs values) for both the Pegler ProFlow 1260 and V955 allowing direct measurement of flow rate to be obtained, ensuring the system is balanced correctly for optimum efficiency. Using the Pegler ProFlow BC3 balancing computer is further described on page 28.

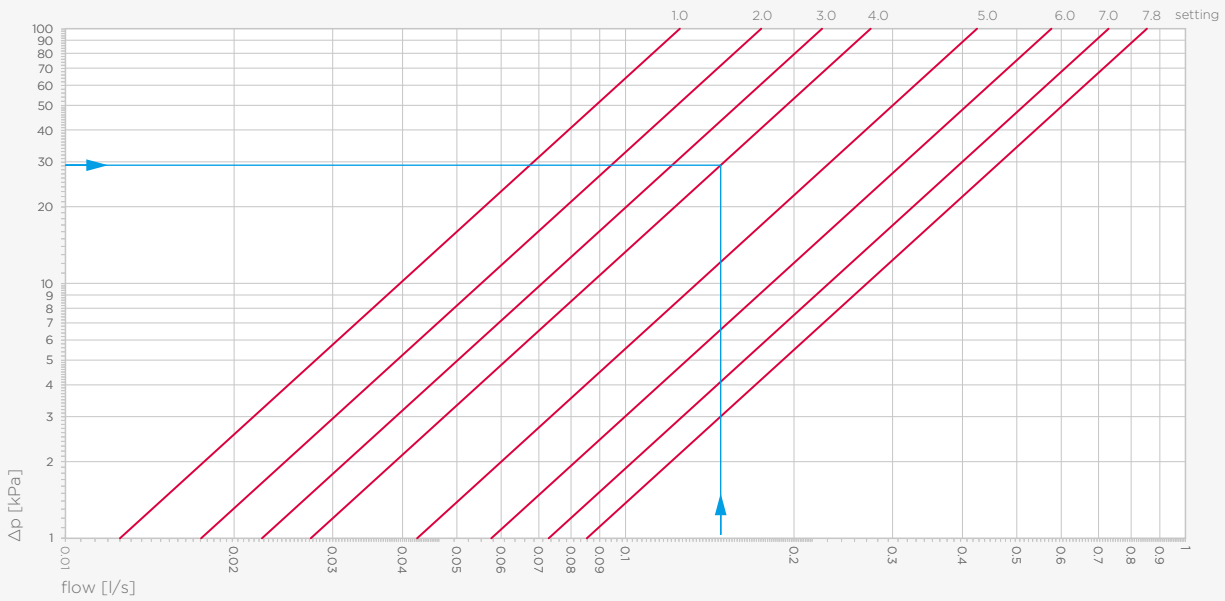

Pegler ProFlow 1260 DN20 standard flow - hand wheel setting

warranty

Please contact Aalberts integrated piping systems for the most recent warranty conditions that apply to Pegler ProFlow.

Pegler ProFlow

balancing valves

1260 Pegler ProFlow static balancing valve

(2 x female thread)

specifications

- max. operating pressure 20 bar
- operating temperature -10°C to 120°C
- fixed orifice measuring (FODRV)
- handle position indicator
- meets BS7350
- includes memory stop
- includes test points

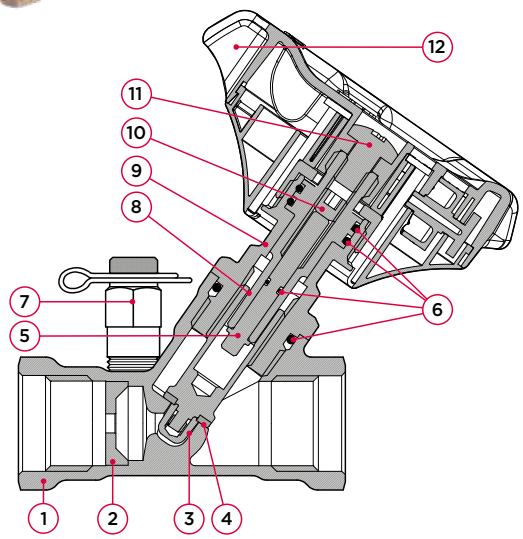

no.	component	material
1	body	brass (CW511L)
2	orifice plate	brass (CW511L)
3	disc	brass (CW511L)
4	disc seal	PTFE
5	regulator pin	brass (CW511L)
6	o-rings	EPDM
7	test points	DZR brass (CW602N)
8	spindle	brass (CW511L)
9	bonnet	brass (CW511L)
10	adjustment screw	brass (CW511L)
11	set screw	stainless steel (AISI 304)
12	handle	30% glass filled PA 66

maximum pressure conditions [bar]

max. pressure	test pressure shell	test pressure seat
20	30	22

pressure equipment directive category

all dimensions	SEP

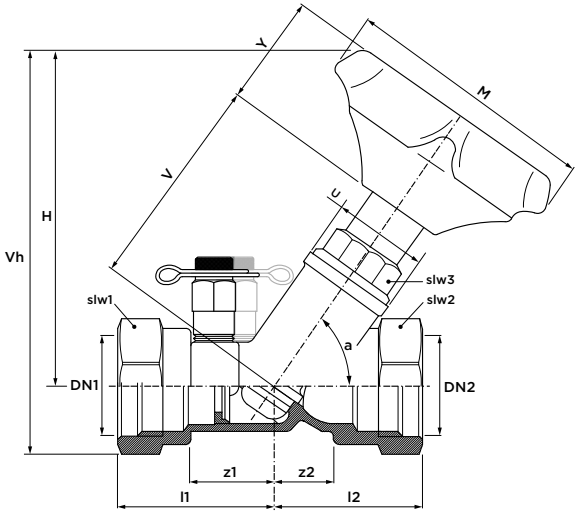

dimension	article no.	weight [kg]	l1	l2	z1	z2	U [Ø]	V	Y	M	H	Vh	a [°]	slw1/slw2	slw3
G½" (DN15) ULF	126039	0.44	36	38	19	21	27	32	38	90	92	107	55	28	25
G½" (DN15) LF	126022	0.44	36	38	19	21	27	32	38	90	92	107	55	28	25
G½" (DN15) MF	126043	0.44	36	38	19	21	27	32	38	90	92	107	55	28	25
G½" (DN15) SF	126023	0.44	36	38	19	21	27	32	38	90	92	107	55	28	25
G¾" (DN20) SF	126024	0.58	34	43	18	24	27	38	38	90	96	114	55	32	25
G1" (DN25) SF	126025	0.84	44	51	24	31	33	45	38	90	108	131	55	41	25
G1¼" (DN32) SF	126026	1.22	50	66	29	45	41	56	38	90	126	154	55	50	32
G1 ½" (DN40) SF	126027	1.51	52	67	31	46	60	62	38	90	132	163	55	55	35
G2" (DN50) SF	126028	2.55	69	87	38	58	58	74	38	90	151	189	55	70	35

dimension	Kv [m³/h]	Kvs [m³/h]	flow [l/s] min.	flow [l/s] max.	flow [l/min] min.	flow [l/min] max.	flow [l/h] min.	flow [l/h] max.
G½" (DN15) ULF	0.27	0.25	0.008	0.016	0.46	0.94	27.4	56.2
G½" (DN15) LF	0.55	0.49	0.015	0.031	0.91	1.84	54.7	110.5
G½" (DN15) MF	1.08	0.98	0.030	0.061	1.80	3.67	108.0	220.0
G½" (DN15) SF	2.09	2.02	0.058	0.126	3.49	7.54	209.2	452.5
G¾" (DN20) SF	3.07	4.43	0.123	0.191	7.37	11.45	442.4	686.9
G1" (DN25) SF	6.19	6.07	0.172	0.377	10.32	22.61	619.2	1356.8
G1¼" (DN32) SF	13.13	11.10	0.365	0.690	21.89	41.38	1313.3	2482.6
G1 ½" (DN40) SF	22.49	22.26	0.625	1.383	37.48	82.95	2248.9	4977.0
G2" (DN50) SF	28.19	42.46	1.180	1.751	70.77	105.07	4246.2	6304.3

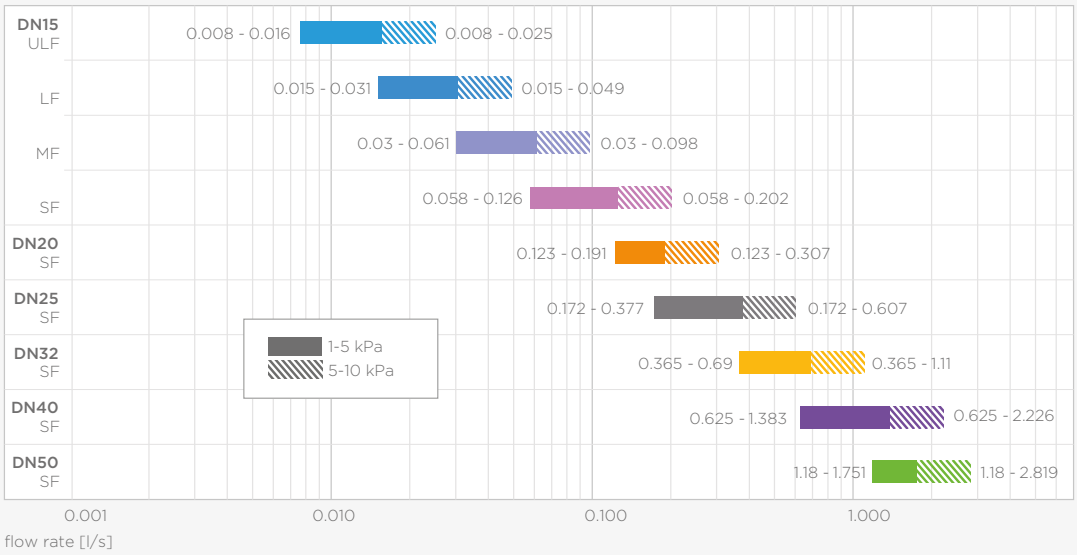

flow rate Pegler ProFlow 1260

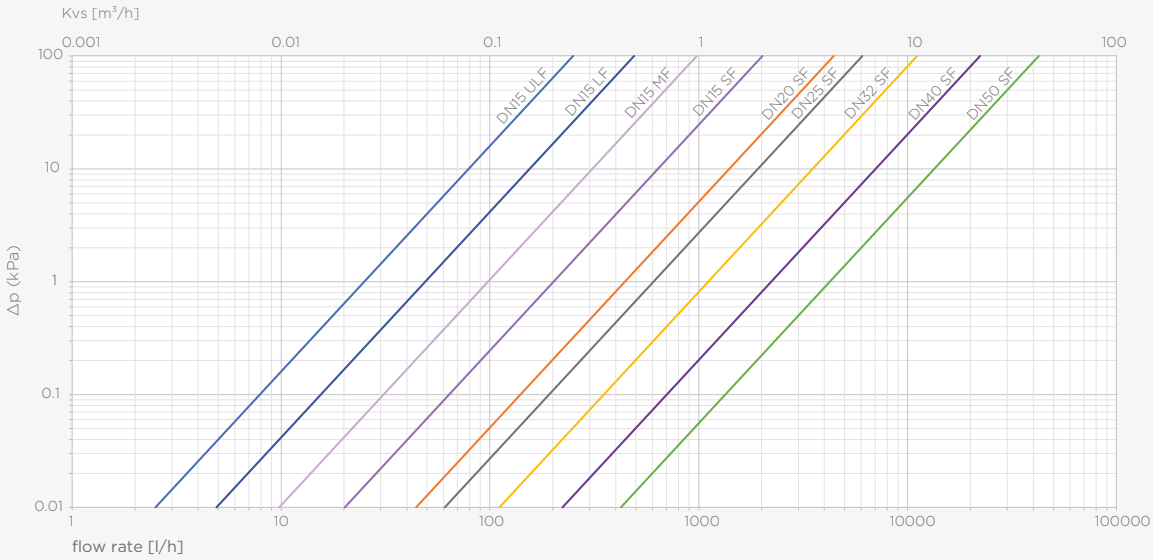

pressure loss Pegler ProFlow 1260

PS1260 Pegler ProFlow static balancing valve

(2x press)

specifications

- max. operating pressure 16 bar
- operating temperature -10°C to 110°C
- VSH XPress gunmetal ends for carbon steel, stainless steel and copper tube
- fixed orifice measuring (FODRV)
- handle with visual digital positioning indicator
- memory stop for setting fixation
- test points for needle connection

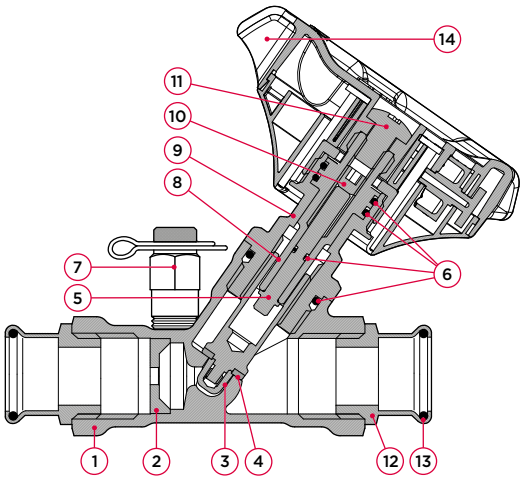

no.	component	material
1	body	brass (CW511L)
2	orifice plate	brass (CW511L)
3	disc	brass (CW511L)
4	disc seal	PTFE
5	regulator pin	brass (CW511L)
6	o-rings	EPDM
7	test points	DZR brass (CW602N)
8	spindle	brass (CW511L)
9	bonnet	brass (CW511L)
10	adjustment screw	brass (CW511L)
11	set screw	stainless steel (AISI 304)
12	end connection	gunmetal (CC499K)
13	o-ring	EPDM
14	handle	30% glass filled PA 66

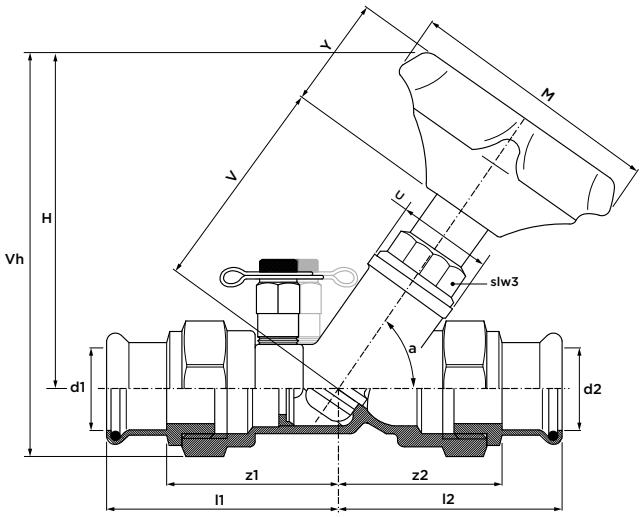

maximum pressure [bar]

operating pressure	test pressure shell	test pressure seat
16	24	17.6

pressure equipment directive category

all dimensions	SEP

dimension	article no.	weight [kg]	l1	l2	z1	z2	U [Ø]	V	Y	M	H	Vh	a [°]	slw3
15 (DN15) ULF	126087	0.55	57	59	37	39	27	32	38	90	92	107	55	25
15 (DN15) LF	126029	0.55	57	59	37	39	27	32	38	90	92	107	55	25
15 (DN15) MF	126088	0.55	57	59	37	39	27	32	38	90	92	107	55	25
15 (DN15) SF	126030	0.55	57	59	37	39	27	32	38	90	92	107	55	25
18 (DN15) LF	126134	0.55	58	60	38	40	27	32	38	90	92	107	55	25
18 (DN15) SF	126135	0.55	58	60	38	40	33	32	38	90	92	107	55	25
22 (DN20) SF	126031	0.67	57	66	36	45	27	38	38	90	96	114	55	25
28 (DN25) SF	126032	0.99	70	78	47	55	33	45	38	90	108	131	55	25
35 (DN32) SF	126033	1.58	79	95	53	69	41	56	38	90	126	154	55	32
42 (DN40) SF	126034	2.05	88	103	58	73	60	62	38	90	132	163	55	35
54 (DN50) SF	126035	3.36	112	130	77	95	58	74	38	90	151	189	55	35

dimension	Kv [m³/h]	Kvs [m³/h]	flow [l/s] min.	flow [l/s] max.	flow [l/min] min.	flow [l/min] max.	flow [l/h] min.	flow [l/h] max.
15 (DN15) ULF	0.27	0.25	0.008	0.016	0.46	0.94	27.4	56.2
15 (DN15) LF	0.55	0.49	0.015	0.031	0.91	1.84	54.7	110.5
15 (DN15) MF	1.08	0.98	0.030	0.061	1.80	3.67	108.0	220.0
15 (DN15) SF	2.09	2.02	0.058	0.126	3.49	7.54	209.2	452.5
18 (DN15) LF	0.55	0.49	0.015	0.031	0.91	1.84	54.7	110.5
18 (DN15) SF	2.09	2.02	0.058	0.126	3.49	7.54	209.2	452.5
22 (DN20) SF	3.07	4.43	0.123	0.191	7.37	11.45	442.4	686.9
28 (DN25) SF	6.19	6.07	0.172	0.377	10.32	22.61	619.2	1356.8
35 (DN32) SF	13.13	11.10	0.365	0.690	21.89	41.38	1313.3	2482.6
42 (DN40) SF	22.49	22.26	0.625	1.383	37.48	82.95	2248.9	4977.0
54 (DN50) SF	28.19	42.46	1.180	1.751	70.77	105.07	4246.2	6304.3

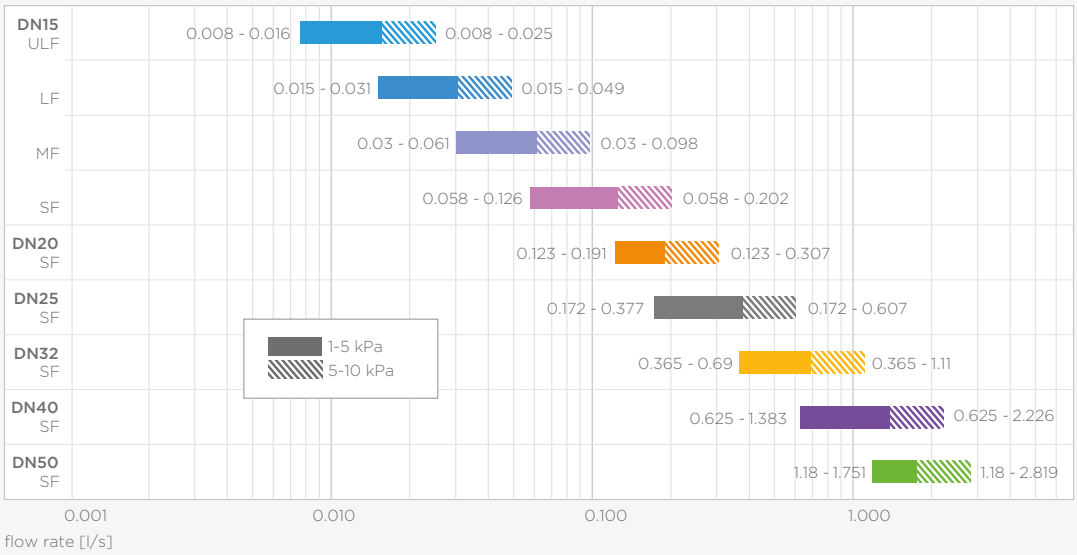

flow rate Pegler ProFlow PS1260

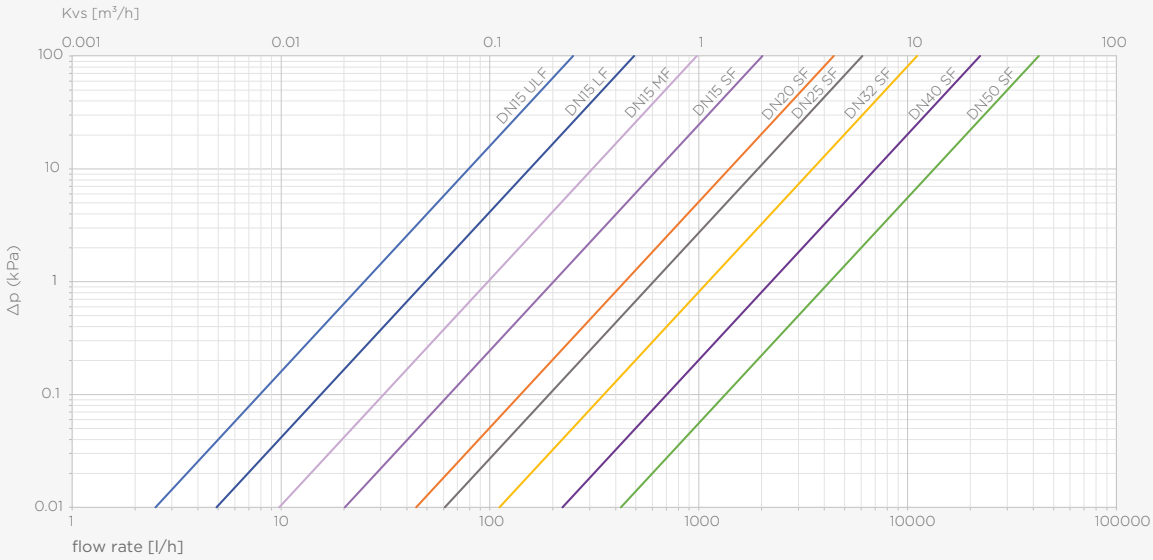

pressure loss Pegler ProFlow PS1260

PSU1260 Pegler ProFlow static balancing valve

(2 x press, with union connection, inlet)

specifications

- max. operating pressure 16 bar
- operating temperature -10°C to 110°C
- VSH XPress gunmetal ends for carbon steel, stainless steel and copper tube
- fixed orifice measuring (FODRV)
- handle with visual digital positioning indicator
- memory stop for setting fixation
- test points for needle connection

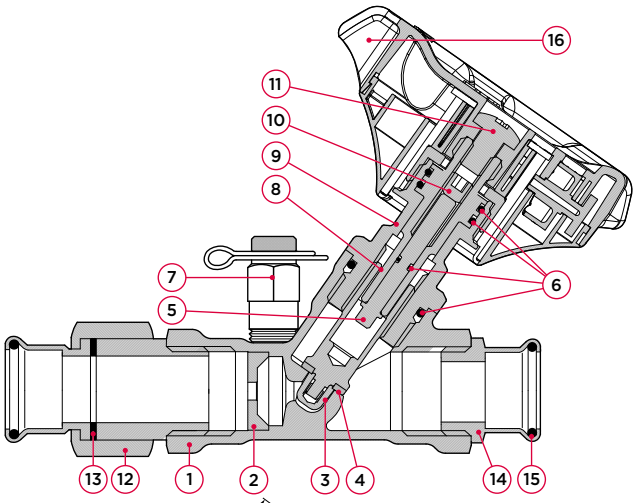

no.	component	material
1	body	brass (CW511L)
2	orifice plate	brass (CW511L)
3	disc	brass (CW511L)
4	disc seal	PTFE
5	regulator pin	brass (CW511L)
6	o-rings	EPDM
7	test point	brass (CW602N)
8	spindle	brass (CW511L)
9	bonnet	brass (CW511L)
10	adjustment screw	brass (CW511L)
11	set screw	stainless steel (AISI 304)
12	union nut	gunmetal (CC499K)
13	flat seal	fiberring
14	end connection	gunmetal (CC499K)
15	o-ring	EPDM
16	handle	30% glass filled PA 66

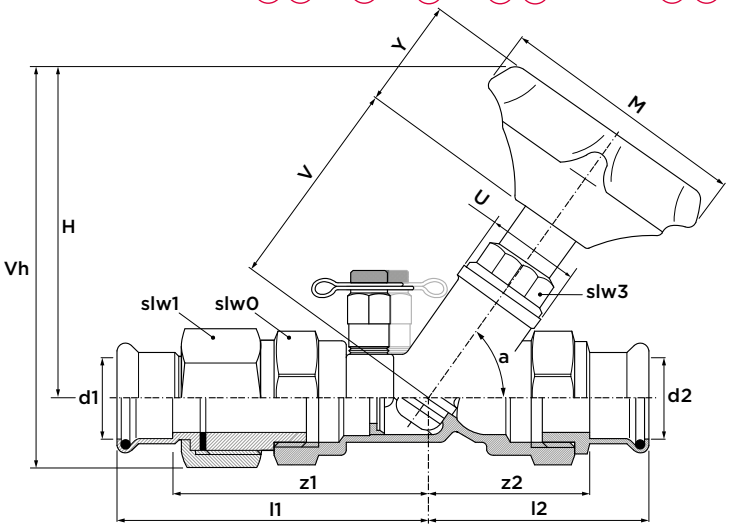

107

maximum pressure [bar]		
operating pressure	test pressure shell	test pressure seat
16	24	17.6

pressure equipment directive category	
all dimensions	SEP

dimension			article no.	weight [kg]	l1	l2	z1	z2	U [Ø]	V	Y	M	H	Vh	a [°]	slw0	slw1	slw3
15	(DN15)	ULF	126293	0.55	79	59	59	39	27	32	38	90	92	107	55	28	32	25
15	(DN15)	LF	126247	0.55	79	59	59	39	27	32	38	90	92	107	55	28	32	25
15	(DN15)	MF	126291	0.55	79	59	59	39	27	32	38	90	92	107	55	28	32	25
15	(DN15)	SF	126248	0.55	79	59	59	39	27	32	38	90	92	107	55	28	32	25
18	(DN15)	LF	126249	0.55	74	60	54	40	27	32	38	90	92	107	55	28	32	25
18	(DN15)	SF	126250	0.55	74	60	54	40	27	32	38	90	92	107	55	28	32	25
22	(DN20)	SF	126251	0.67	87	66	66	45	27	38	38	90	96	114	55	32	32	25
28	(DN25)	SF	126252	0.99	95	78	72	55	33	45	38	90	108	131	55	41	39	25
32	(DN32)	SF	126253	1.59	105	95	79	69	41	56	38	90	126	154	55	50	50	32
40	(DN40)	SF	126254	2.05	116	103	86	73	60	62	38	90	132	163	55	55	55	35
50	(DN50)	SF	126255	3.36	142	130	107	95	58	74	38	90	151	189	55	70	70	35

dimension			Kv [m³/h]	Kvs [m³/h]	flow [l/s] min.	flow [l/s] max.	flow [l/min] min.	flow [l/min] max.	flow [l/h] min.	flow [l/h] max.
15	(DN15)	ULF	0.27	0.25	0.008	0.016	0.46	0.94	27.4	56.2
15	(DN15)	LF	0.55	0.49	0.015	0.031	0.91	1.84	54.7	110.5
15	(DN15)	MF	1.08	0.98	0.030	0.061	1.80	3.67	108.0	220.0
15	(DN15)	SF	2.09	2.02	0.058	0.126	3.49	7.54	209.2	452.5
18	(DN15)	LF	0.55	0.49	0.015	0.031	0.91	1.84	54.7	110.5
18	(DN15)	SF	2.09	2.02	0.058	0.126	3.49	7.54	209.2	452.5
22	(DN20)	SF	3.07	4.43	0.123	0.191	7.37	11.45	442.4	686.9
28	(DN25)	SF	6.19	6.07	0.172	0.377	10.32	22.61	619.2	1356.8
32	(DN32)	SF	13.13	11.10	0.365	0.690	21.89	41.38	1313.3	2482.6
40	(DN40)	SF	22.49	22.26	0.625	1.383	37.48	82.95	2248.9	4977.0
50	(DN50)	SF	28.19	42.46	1.180	1.751	70.77	105.07	4246.2	6304.3

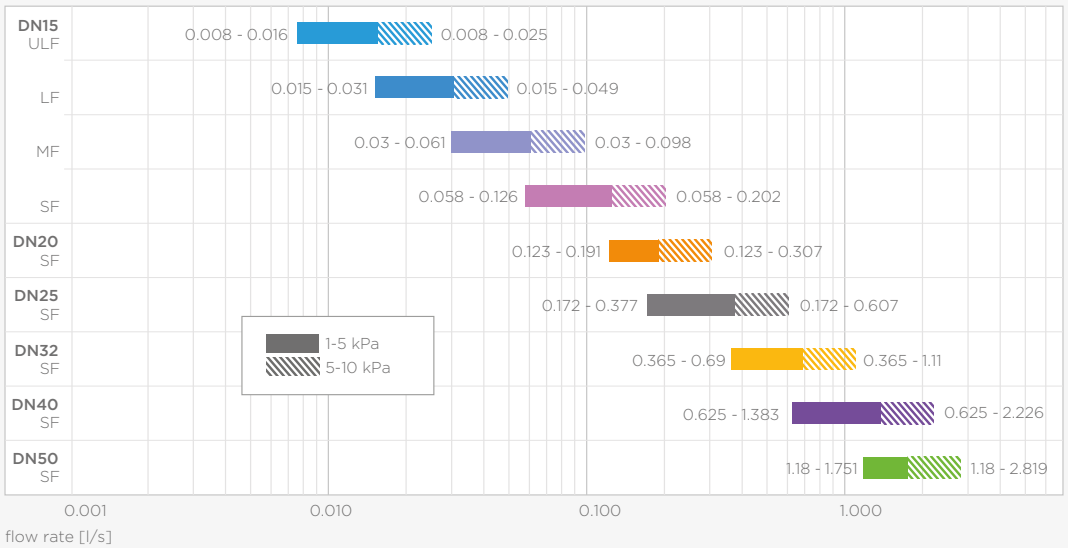

flow rate Pegler ProFlow PSU1260

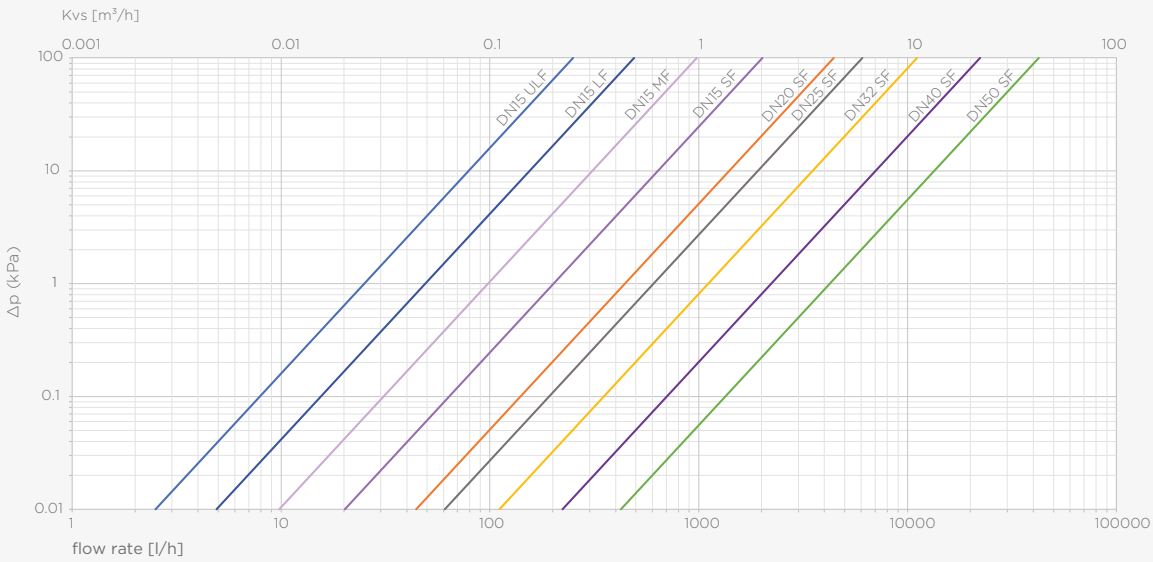

pressure loss Pegler ProFlow PSU1260

PP1260 Pegler ProFlow static balancing valve

(2 x press)

specifications

- max. operating pressure 16 bar
- operating temperature -10°C to 120°C
- VSH PowerPress® connections for thick wall steel tube
- fixed orifice measuring (FODRV)
- handle with visual digital positioning indicator
- memory stop for setting fixation
- test points for needle connection
- socket transport protection
- visual press indicators

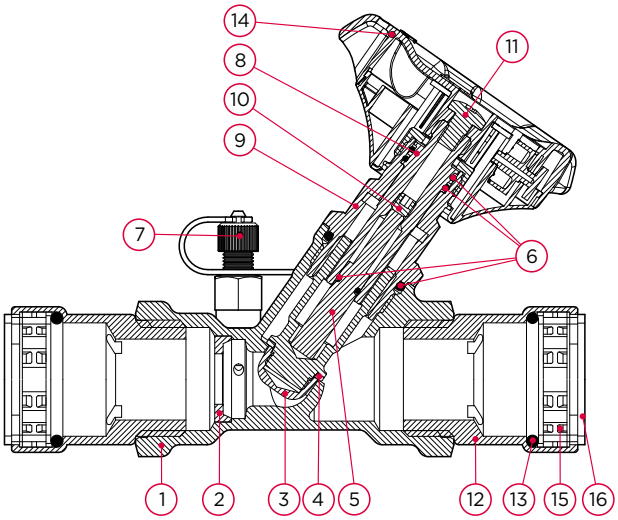

no.	component	material
1	body	brass (CW511L)
2	orifice plate	brass (CW511L)
3	disc	brass (CW511L)
4	disc seal	PTFE
5	regulator pin	brass (CW511L)
6	o-rings	EPDM
7	test point	DZR brass (CW602N)
8	spindle	brass (CW511L)
9	bonnet	brass (CW511L)
10	adjustment screw	brass (CW511L)
11	set screw	stainless steel (AISI 304)
12	press end	carbon steel zinc nickel plated
13	o-ring	EPDM
14	handle	30% glass filled PA 66
15	grab ring	stainless steel

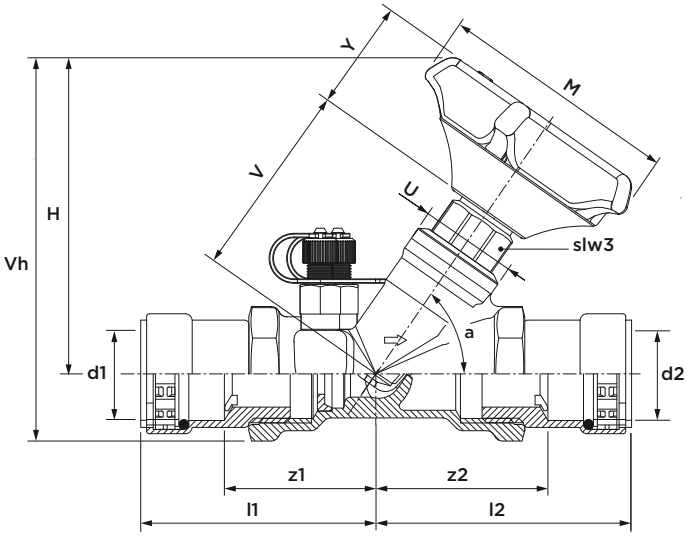

maximum pressure [bar]

operating pressure	test pressure shell	test pressure seat
16	24	17.6

pressure equipment directive category	
all dimensions	SEP

dimension		article no.	weight [kg]	l1	l2	z1	z2	U [Ø]	V	Y	M	H	Vh	a [°]	slw3
½" (DN15)	LF	PWR9440486	0.68	73	75	46	48	27	64	38	90	92	107	55	25
½" (DN15)	SF	PWR9440497	0.68	73	75	46	48	27	64	38	90	92	107	55	25
¾" (DN20)	SF	PWR9440508	0.80	74	83	43	52	27	64	38	90	96	114	55	25
1" (DN25)	SF	PWR9440519	1.15	88	96	53	60	33	73	38	90	108	131	55	25
1¼" (DN32)	SF	PWR9440521	1.93	110	126	62	78	41	81	38	90	126	154	55	32
1 ½" (DN40)	SF	PWR9440530	2.52	114	129	66	81	60	85	38	90	132	163	55	35
2" (DN50)	SF	PWR9440541	4.02	133	149	80	96	58	103	38	90	151	189	55	35

dimension			Kv [m³/h]	Kvs [m³/h]	flow [l/s] min.	flow [l/s] max.	flow [l/min] min.	flow [l/min] max.	flow [l/h] min.	flow [l/h] max.
½″	(DN15)	LF	0.55	0.49	0.015	0.031	0.91	1.84	54.7	110.5
½″	(DN12)	SF	2.09	2.02	0.058	0.126	3.49	7.54	209.2	452.5
¾″	(DN20)	SF	3.07	4.43	0.123	0.191	7.37	11.45	442.4	686.9
1″	(DN25)	SF	6.19	6.07	0.172	0.377	10.32	22.61	619.2	1356.8
1¼″	(DN32)	SF	13.13	11.10	0.365	0.690	21.89	41.38	1313.3	2482.6
1 ½″	(DN40)	SF	22.49	22.26	0.625	1.383	37.48	82.95	2248.9	4977.0
2″	(DN50)	SF	28.19	42.46	1.180	1.751	70.77	105.07	4246.2	6304.3

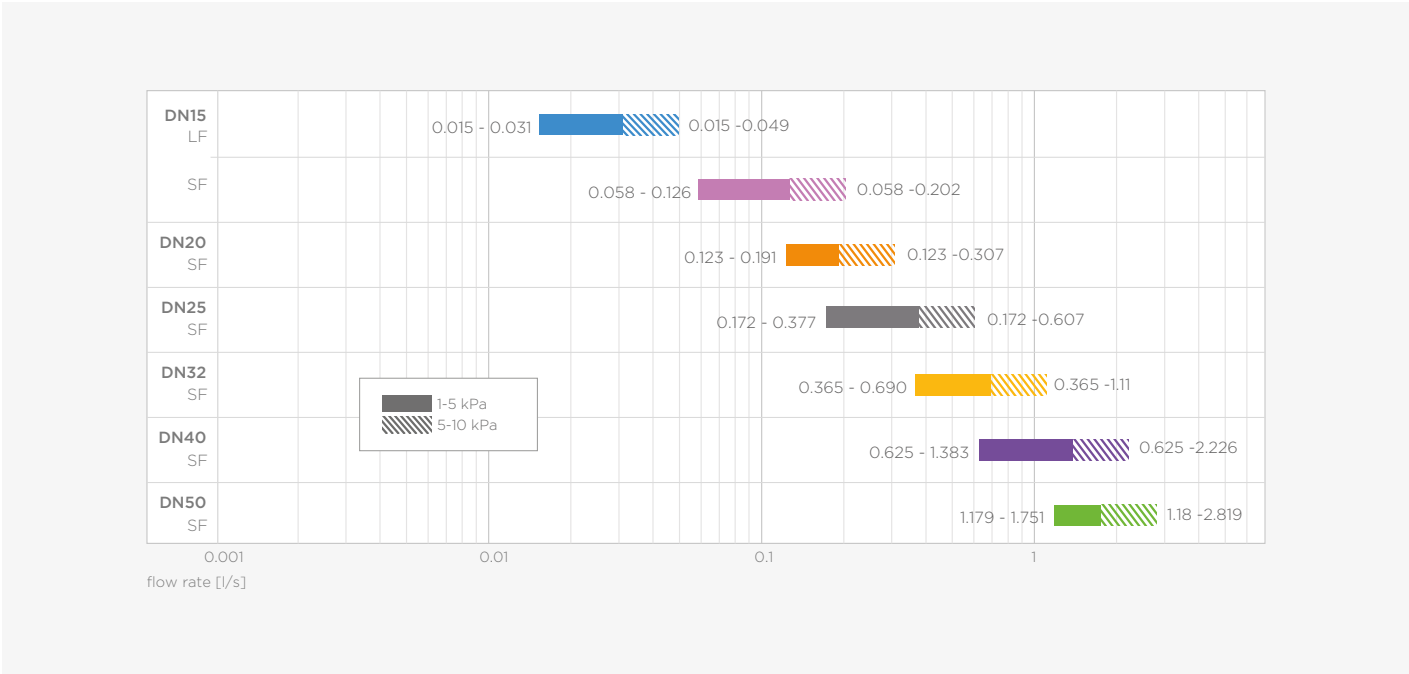

flow rate Pegler ProFlow PP1260

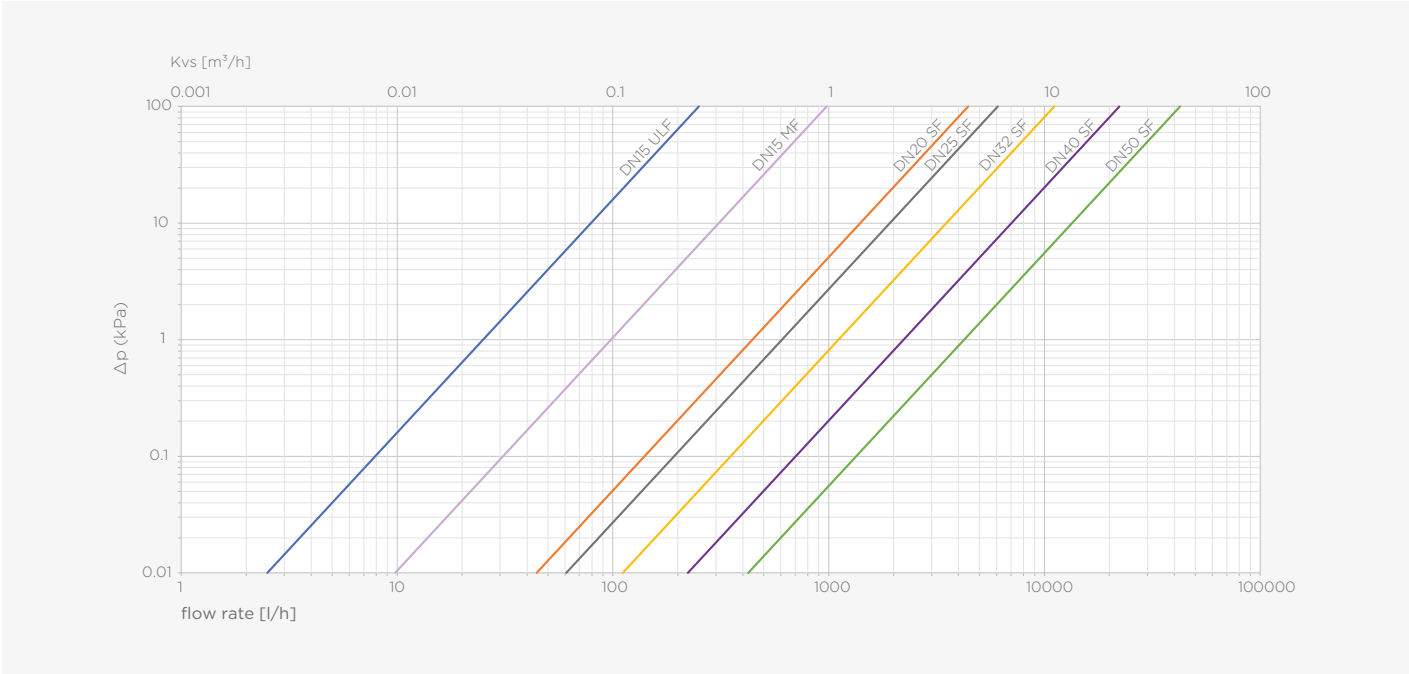

pressure loss Pegler ProFlow PP1260

V955 Pegler ProFlow static balancing valve PN16

(2 x flange)

specifications

- max. operating pressure 16 bar
- operating temperature -10°C to 120°C
- fixed orifice
- regulating and isolating functions
- face to face dimensions to EN558-1
- DZR brass test points for flow measurement
- lockable settings

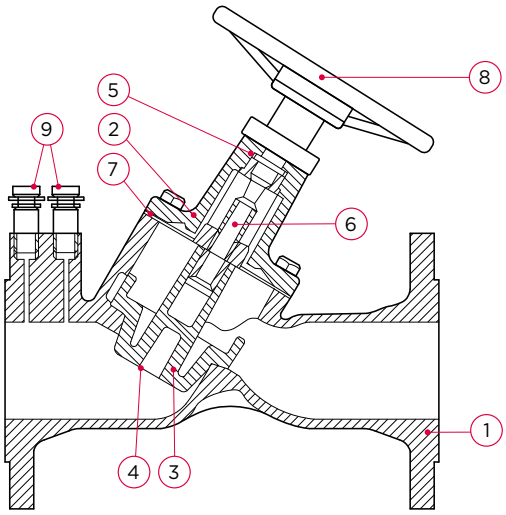

no.	component	material
1	body	ductile iron (EN-GJS-400-15)
2	bonnet	ductile iron (EN-GJS-400-15)
3	disc	ductile iron (EN-GJS-400-15), EPDM coated
4	disc nail	brass
5	o-ring	EPDM
6	stem	stainless steel
7	gasket	graphite
8	handwheel DN50-100	carbon steel
	handwheel DN125-300	ductile iron (EN-GJS-400-15)
9	test points	DZR brass (CW602N)

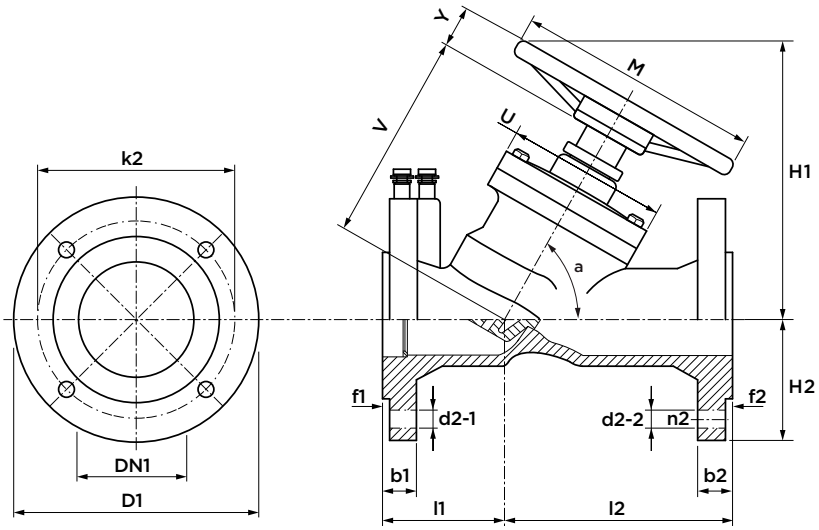

maximum pressure [bar]

operating pressure	test pressure shell	test pressure seat
16	24	17.6

pressure equipment directive category

all dimensions	SEP

dimension	article no.	weight [kg]	D1	d2-1/d2-2	b1/b2	f1/f2	l1	l2	U [Ø]	V	Y	M	H1	H2	n2	k2	a [°]
DN65	150013	17.0	185	19	20	3	73	218	122	192	15	172	263	93	4	145	55
DN80	150014	20.0	200	19	20	3	84	226	130	198	15	172	268	100	8	160	55
DN100	150010	29.0	220	20	22	3	98	252	141	223	15	197	300	110	8	180	55
DN125	150011	40.0	250	20	22	3	115	286	154	242	15	229	328	125	8	210	55
DN150	150012	52.0	285	20	24	3	127	353	167	255	15	261	340	143	8	240	55
DN200	150015	113.0	340	21	26	3	160	440	192	420	15	324	525	170	12	295	55
DN250	150016	185.0	400	21	29	3	169	561	218	449	15	387	572	200	12	355	55
DN300	150017	248.0	455	22	32	4	199	651	243	581	15	450	686	228	12	410	55

			flow [l/s]		flow [l/min]		flow [l/h]	
dimension	**Kv [m³/h]**	**Kvs [m³/h]**	**min.**	**max.**	**min.**	**max.**	**min.**	**ma.x**
DN65	80	104	2.890	5.210	173.40	312.60	10404.0	18756.0
DN80	114	116	3.320	7.210	199.20	432.60	11952.0	25956.0
DN100	149	213	5.920	11.100	355.20	666.00	21312.0	39960.0
DN125	261	333	9.250	16.940	555.00	1016.40	33300.0	60984.0
DN150	371	476	13.220	23.600	793.20	1416.00	47592.0	84960.0
DN200	339	768	21.330	37.760	1279.80	2265.60	76788.0	135936.0
DN250	832	1153	35.890	71.620	2153.40	4297.20	129204.0	257832.0
DN300	873	1743	49.750	108.260	2985.00	6495.60	179100.0	389736.0

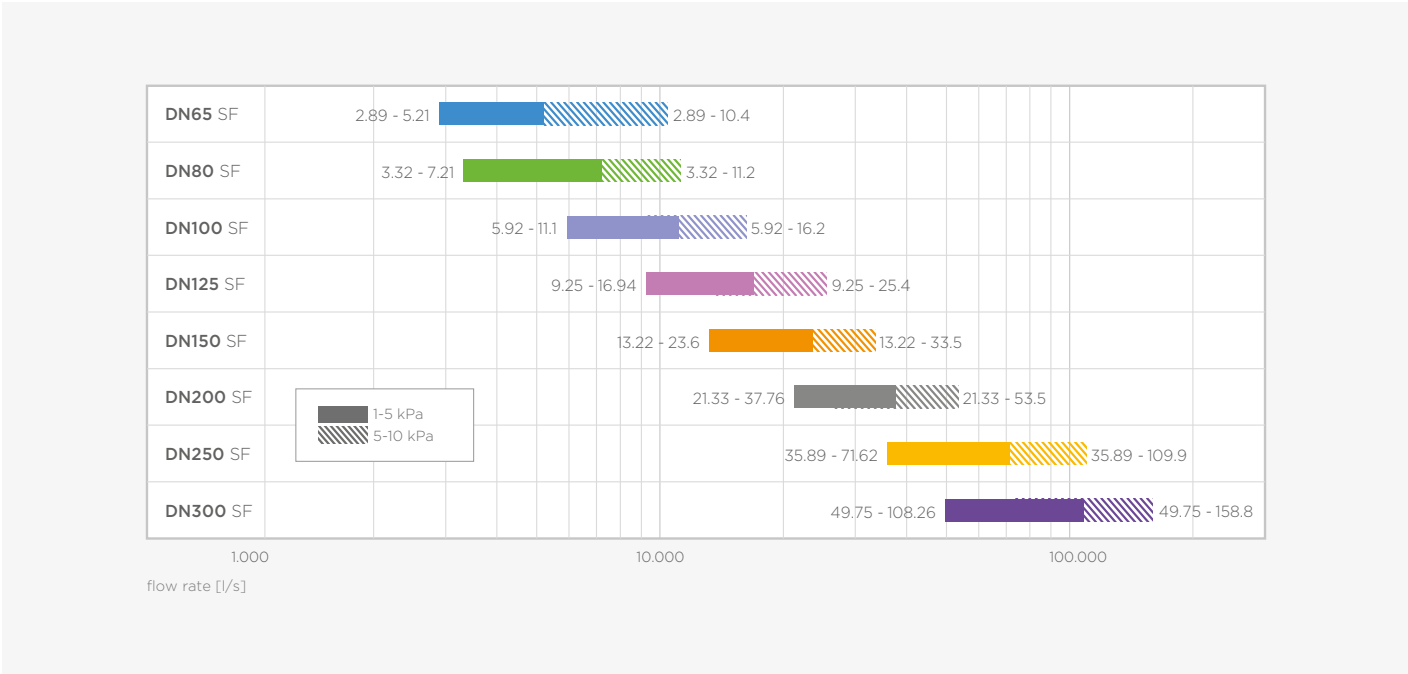

flow rate Pegler ProFlow V955

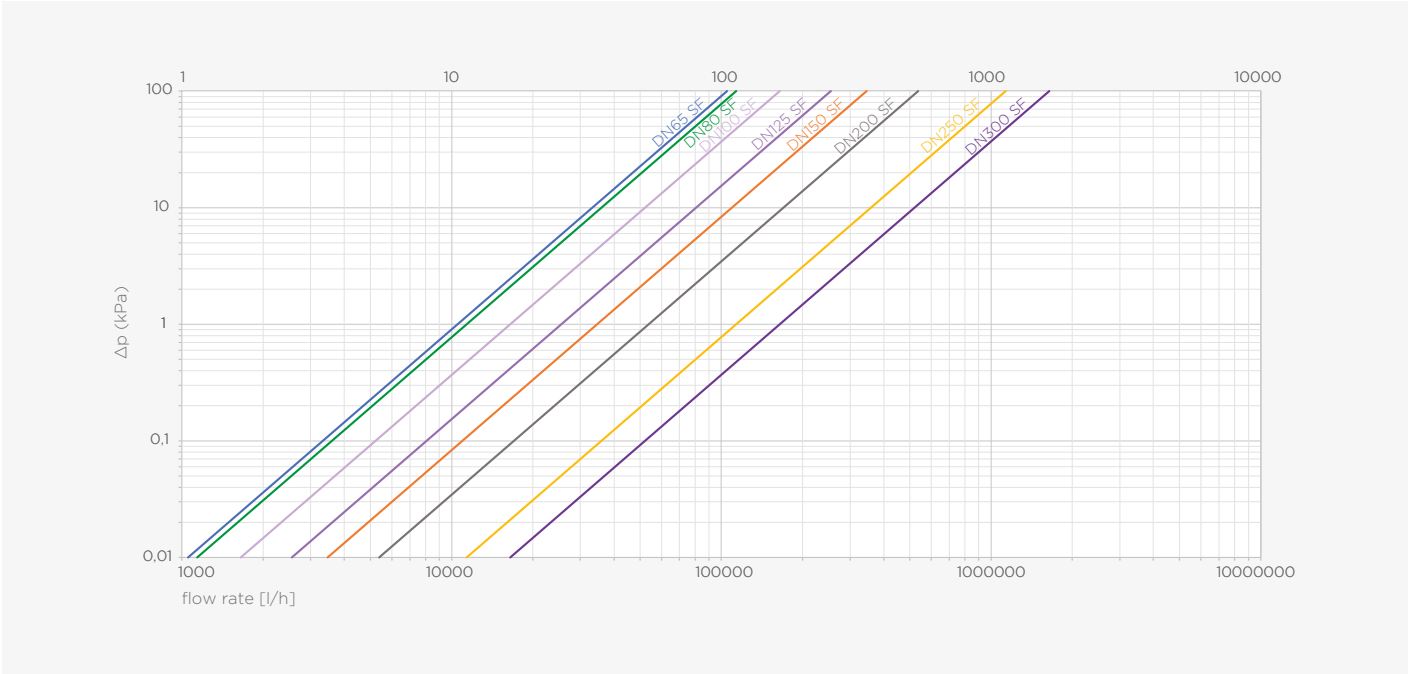

pressure loss Pegler ProFlow V955

1600 Pegler ProFlow pressure independent control valve

(2 x female thread)

specifications

- max. operating pressure 16 bar
- operating temperature -10°C to 90°C
- built-in bypass: full bore forward and backflush
- built in isolation mode

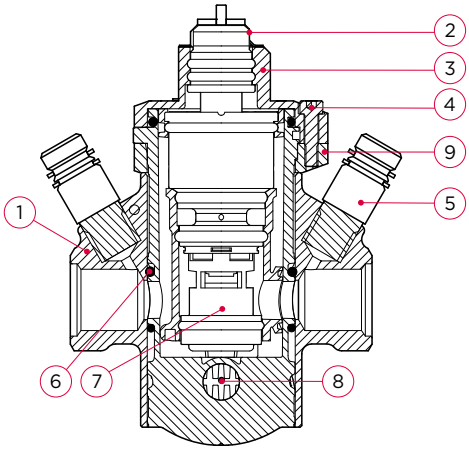

no.	component	material
1	body	brass (CW511L)
2	indicator	stainless steel (AISI 304)
3	cap	brass (CW511L)
4	socket screw	stainless steel (AISI 304)
5	test point	brass (CW602N)
6	o-ring	EPDM
7	cartridge	polyphenylene Sulphide (PPS)
8	locking peg	polyoxymethylene (POM)
9	clamp	brass (CW511L)

maximum pressure [bar]

operating pressure	test pressure shell	test pressure seat
16	24	17.6

pressure equipment directive category

all dimensions	SEP

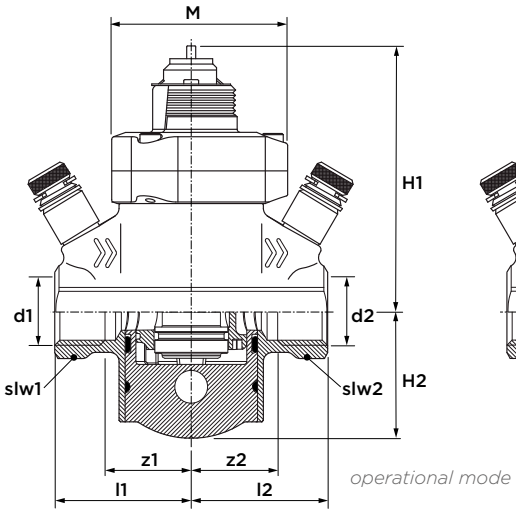

operational mode

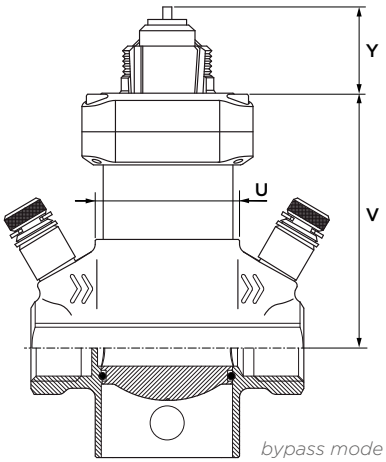

bypass mode

dimension	article no.	weight [kg]	l1/l2	z1/z2	U [Ø]	V	Y	M	H1	H2	slw1/slw2
G½" (DN15) LF	16001	0.90	48	29	49	84	31	65	90	44	27
G½" (DN15) SF	16002	0.90	48	29	49	84	31	65	90	44	27
G½" (DN15) HF	16003	0.90	48	29	49	84	31	65	90	44	27
G¾" (DN20) SF	16004	1.50	52	33	60	107	31	76	105	58	32
G¾" (DN20) HF	16005	1.50	52	33	60	107	31	76	105	58	32
G1" (DN25) SF	16006	1.50	58	42	60	107	31	76	105	58	40

	flow [l/s]		flow [l/min]		flow [l/h]	
dimension	**min.**	**max.**	**min.**	**max.**	**min.**	**max.**
G½" (DN15) LF	0.010	0.037	0.60	2.22	36.0	133.2
G½" (DN15) SF	0.022	0.160	1.32	9.60	79.2	576.0
G½" (DN15) HF	0.078	0.340	4.68	20.40	280.8	1224.0
G¾" (DN20) SF	0.100	0.250	6.00	15.00	360.0	900.0
G¾" (DN20) HF	0.250	0.560	15.00	33.60	900.0	2016.0
G1" (DN25) SF	0.260	0.580	15.60	34.80	936.0	2088.0

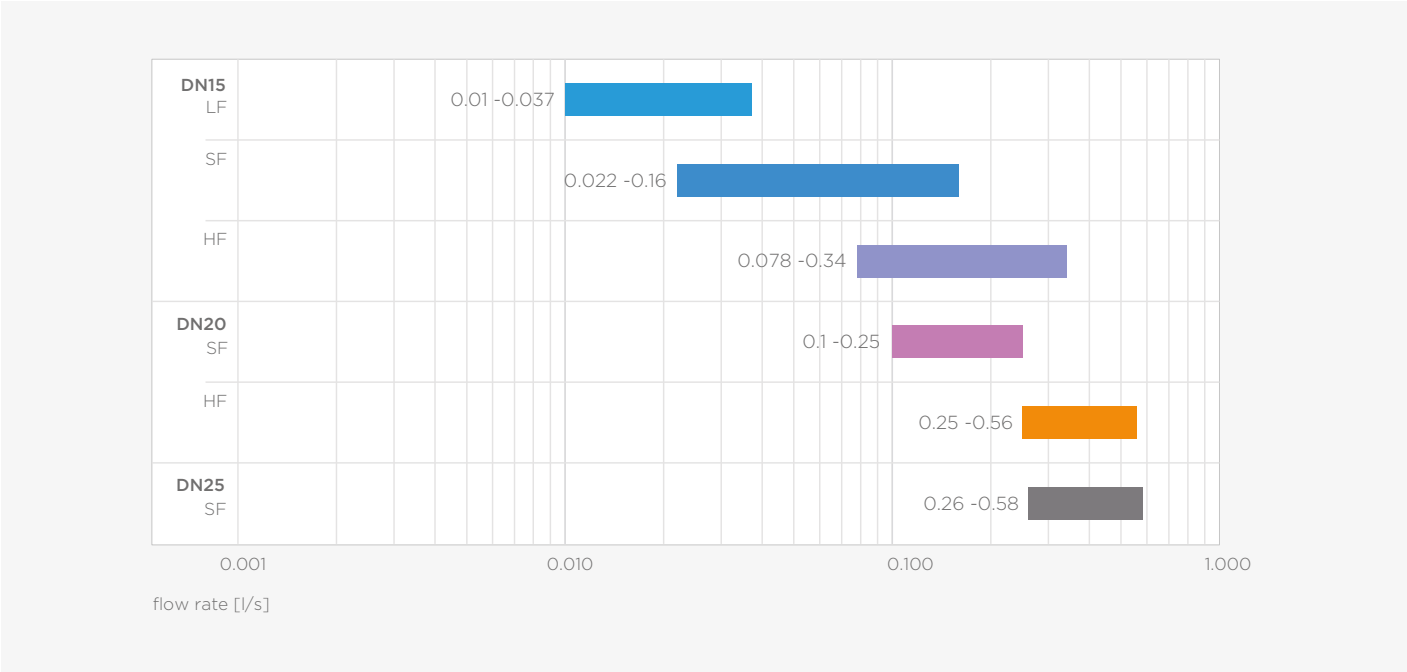

flow rate Pegler ProFlow 1600 PICV

PS1600 Pegler ProFlow pressure independent control valve

(2 x press)

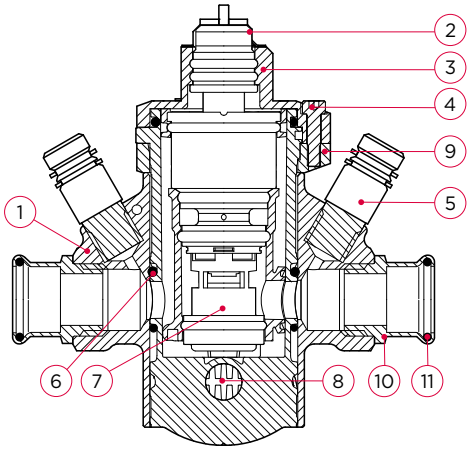

specifications

- max. operating pressure 16 bar
- operating temperature -10°C to 90°C
- built-in bypass: full bore forward and backflush
- built in isolation mode
- VSH XPress ends for copper, carbon steel and stainless steel tube

no.	component	material
1	body	brass (CW511L)
2	indicator	stainless steel (AISI 304)
3	cap	brass (CW511L)
4	socket screw	stainless steel (AISI 304)
5	test point	brass (CW602N)
6	o-ring	EPDM
7	cartridge	polyphenylene Sulphide (PPS)
8	bocking peg	polyoxymethylene (POM)
9	clamp	brass (CW511L)
10	end connection	gunmetal (CC499K)
11	o-ring	EPDM

maximum pressure [bar]

operating pressure	test pressure shell	test pressure seat
16	24	17.6

pressure equipment directive category

all dimensions	SEP

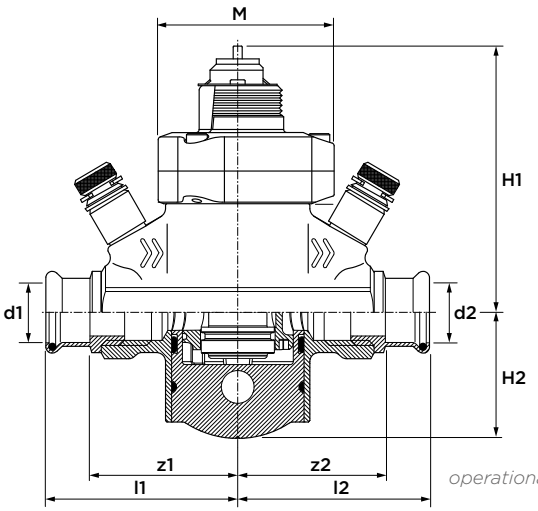

operational mode

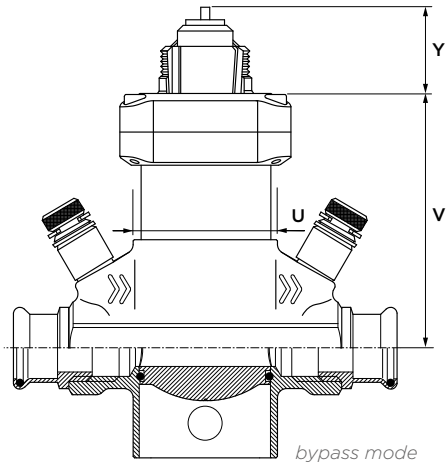

bypass mode

dimension			article no.	weight [kg]	l1/l2	z1/z2	U [Ø]	V	Y	M	H1	H2
15	(DN15)	LF	16020	0.96	68	48	49	84	31	65	90	44
15	(DN15)	SF	16021	0.96	68	48	49	84	31	65	90	44
15	(DN15)	HF	16022	0.96	68	48	49	84	31	65	90	44
22	(DN20)	SF	16023	1.64	76	55	60	107	31	76	105	58
22	(DN20)	HF	16024	1.64	76	55	60	107	31	76	105	58
28	(DN25)	SF	16025	1.64	84	61	60	107	31	76	105	58

dimension			flow [l/s]		flow [l/min]		flow [l/h]	
			min.	max.	min.	max.	min.	max.
15	(DN15)	LF	0.010	0.037	0.60	2.22	36.0	133.2
15	(DN15)	SF	0.022	0.160	1.32	9.60	79.2	576.0
15	(DN15)	HF	0.078	0.340	4.68	20.40	280.8	1224.0
22	(DN20)	SF	0.100	0.250	6.00	15.00	360.0	900.0
22	(DN20)	HF	0.250	0.560	15.00	33.60	900.0	2016.0
28	(DN25)	SF	0.260	0.580	15.60	34.80	936.0	2088.0

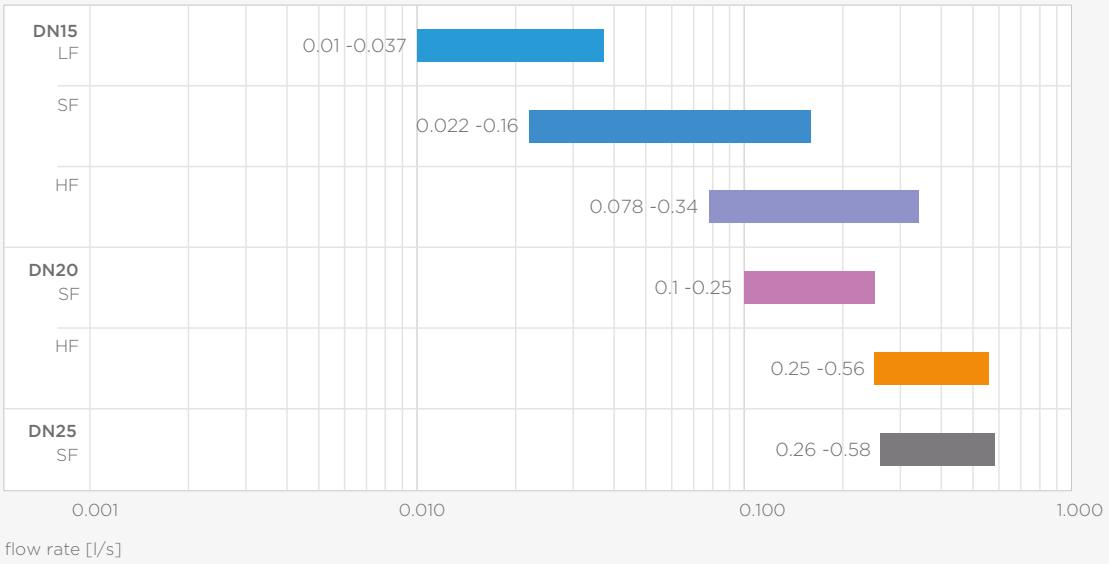

flow rate Pegler ProFlow PS1600 PICV

PSU1600 Pegler ProFlow pressure independent control valve

(2 x press, with union connection, inlet)

specifications

- max. operating pressure 16 bar
- operating temperature -10°C to 90°C
- built-in bypass: full bore forward and backflush
- built in isolation mode
- VSH XPress ends for copper, carbon steel and stainless steel tube

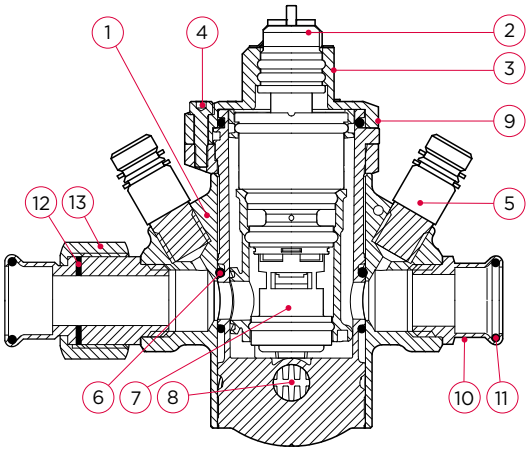

no.	component	material
1	body	brass (CW511L)
2	indicator	stainless steel (AISI 304)
3	cap	brass (CW511L)
4	socket screw	stainless steel (AISI 304)
5	test point	brass (CW602N)
6	o-ring	EPDM
7	cartridge	polyphenylene Sulphide (PPS)
8	locking peg	polyoxymethylene (POM)
9	clamp	brass (CW511L)
10	end connection	gunmetal (CC499K)
11	o-ring	EPDM
12	flat seal	fiberring
13	union nut	gunmetal (CC499K)

maximum pressure [bar]

operating pressure	test pressure shell	test pressure seat
16	24	17.6

pressure equipment directive category	
all dimensions	SEP

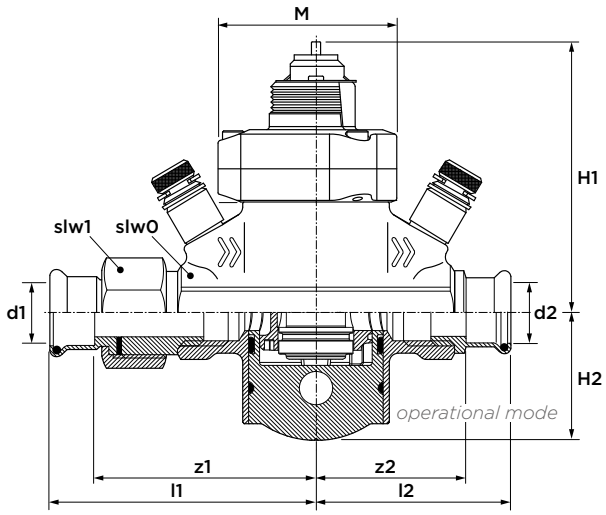

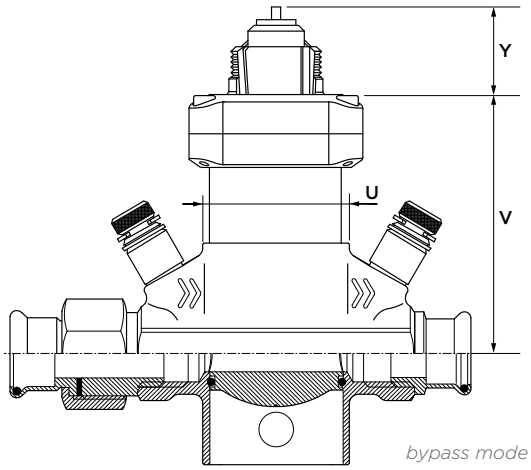

dimension			article no.	weight [kg]	l1	l2	z1	z2	U [Ø]	V	Y	M	H1	H2	slw0	slw2
15	(DN15)	LF	16050	0.96	68	89	48	70	49	84	31	65	90	44	27	34
15	(DN15)	SF	16051	0.96	68	89	48	70	49	84	31	65	90	44	27	34
15	(DN15)	HF	16052	0.96	68	89	48	70	49	84	31	65	90	44	27	34
22	(DN20)	SF	16053	1.64	75	105	55	84	60	107	31	76	105	58	32	40
22	(DN20)	HF	16054	1.64	75	105	55	84	60	107	31	76	105	58	32	40
28	(DN25)	SF	16055	1.64	84	109	62	86	60	107	31	76	105	58	40	48

dimension			flow [l/s]		flow [l/min]		flow [l/h]	
			min.	max.	min.	max.	min.	max.
15	(DN15)	LF	0.010	0.037	0.60	2.22	36.0	133.2
15	(DN15)	SF	0.022	0.160	1.32	9.60	79.2	576.0
15	(DN15)	HF	0.078	0.340	4.68	20.40	280.8	1224.0
22	(DN20)	SF	0.100	0.250	6.00	15.00	360.0	900.0
22	(DN20)	HF	0.250	0.560	15.00	33.60	900.0	2016.0
28	(DN25)	SF	0.260	0.580	15.60	34.80	936.0	2088.0

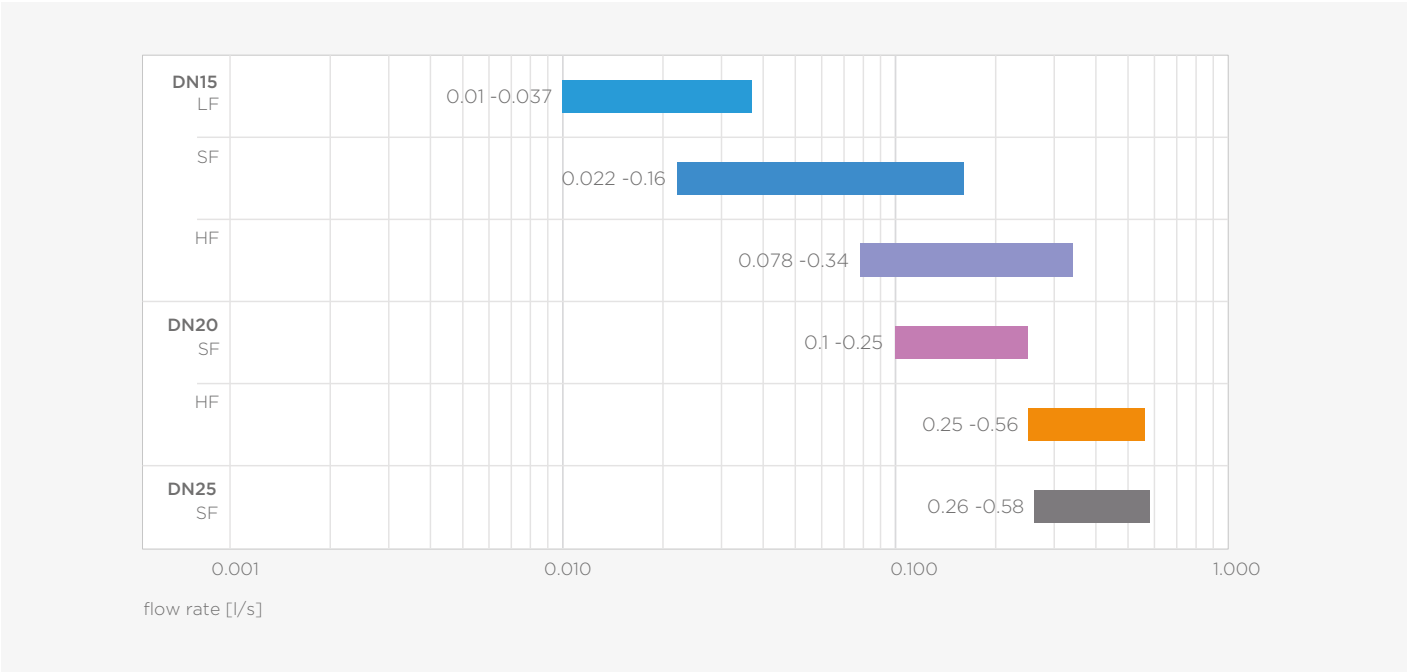

flow rate Pegler ProFlow PSU1600 PICV

1500 Pegler ProFlow pressure independent control valve

(2 x female thread)

specifications

- built in direct flow measurement with venturi technology
- clear visual indicator for settings
- new Fast Flush cap for simplified access to cartridge and flushing
- VSH XPress connections for copper, carbon steel and stainless steel tube
- differential pressure control range 30-400 kPa
- on/off control characteristic

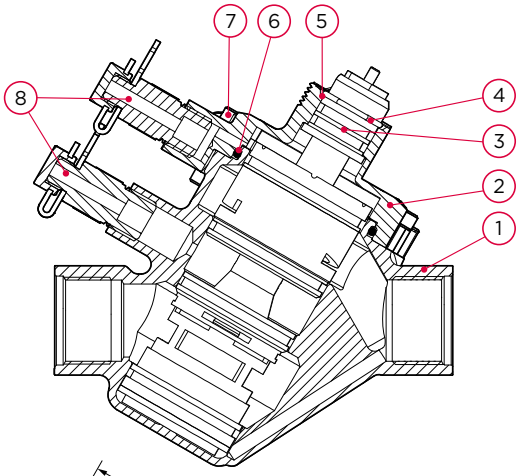

no.	component	material
1	body	DN15-25: brass (CW511L) DN32-50: brass (CC770S lead-free)
2	cap	DN15-25: brass (CW511L) DN32-50: brass (CC770S lead-free)
3	cartridge	polyphenylene sulphide (PPS)
4	spring clip	stainless steel (302526)
5	indicator	stainless steel (AISI 304)
6	o-ring	EPDM (EP1/1/5)
7	socket screw	stainless steel (A2-70)
8	test point	brass (CW602N)

maximum pressure [bar]

operating pressure	test pressure shell	test pressure seat
25	37.5	n/a

pressure equipment directive category

all sizes	SEP

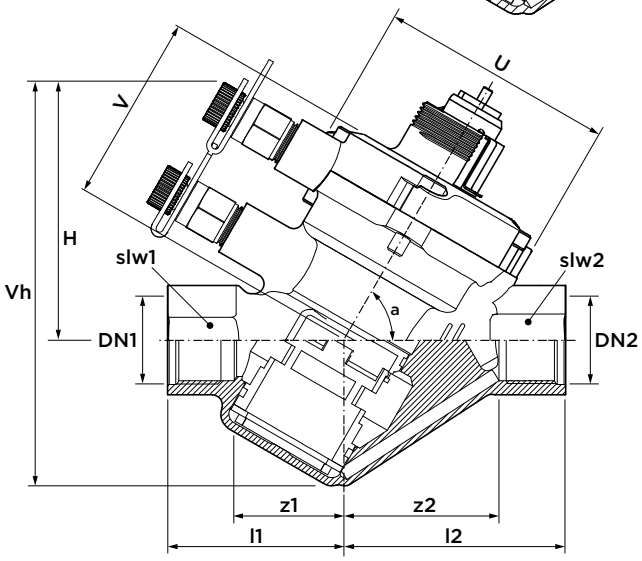

dimension	article no.	weight [kg]	l1	l2	z1	z2	H	V	U [Ø]	a [°]	slw1/slw2	Vh
G½" (DN15) LF	15112	0.677	45	57	25	37	69	45	68	60	28	104
G½" (DN15) SF	15113	0.677	45	58	25	37	69	45	68	60	28	104
G½" (DN15) HF	15114	0.677	45	59	25	37	69	45	68	60	28	104
G¾" (DN20) SF	15115	1.066	53	67	33	47	78	57	81	60	34	122
G¾" (DN20) HF	15116	1.066	53	67	33	47	78	57	81	60	34	122
G1" (DN25) SF	15117	1.587	59	83	37	53	89	65	108	60	41	132
G¾" (DN25) HF	15118	1.587	59	83	37	53	89	65	108	60	41	132
G1¼" (DN32) HF	15119	2.103	69	90	44	64	102	77	124	60	50	156
G1¾"(DN40) SF	15272	3.652	78	112	54	87	129	107	162	60	57	195
G2" (DN50) HF	15273	4.093	86	114	56	85	128	106	162	60	70	195

	flow [l/s]		flow [l/min]		flow [l/h]	
dimension	**min.**	**max.**	**min.**	**max.**	**min.**	**max.**
G½" (DN15) LF	0.009	0.033	0.54	1.98	32.4	118.8
G½" (DN15) SF	0.029	0.146	1.74	8.76	104.4	525.6
G½" (DN15) HF	0.080	0.308	4.80	18.48	288.0	1108.8
G¾" (DN20) SF	0.097	0.264	5.82	15.84	349.2	950.4
G¾" (DN20) HF	0.229	0.585	13.74	35.1	824.4	2106.0
G1" (DN25) SF	0.235	0.589	14.1	35.34	846.0	2120.4
G¾" (DN25) HF	0.393	0.86	23.58	51.6	1414.8	3096.0
G1¼" (DN32) HF	0.503	1.159	30.18	69.54	1810.8	4172.4
G1¾"(DN40) SF	0.981	1.988	58.86	119.28	3531.6	7156.8
G2" (DN50) HF	1.347	3.168	80.82	190.08	4849.2	11404.8

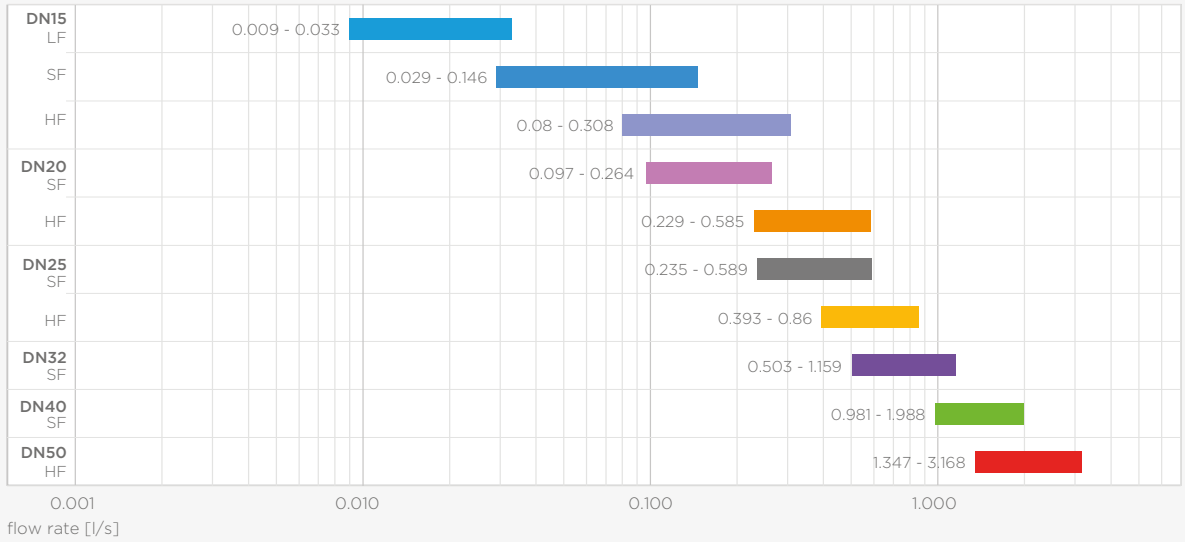

flow rate Pegler ProFlow 1500 PICV

PS1500 Pegler ProFlow pressure independent control valve

(2 x press)

specifications

- built in direct flow measurement with venturi technology
- clear visual indicator for settings
- new Fast Flush cap for simplified access to cartridge and flushing
- VSH XPress connections for copper, carbon steel and stainless steel tube
- differential pressure control range 30-400 kPa
- on/off control characteristic

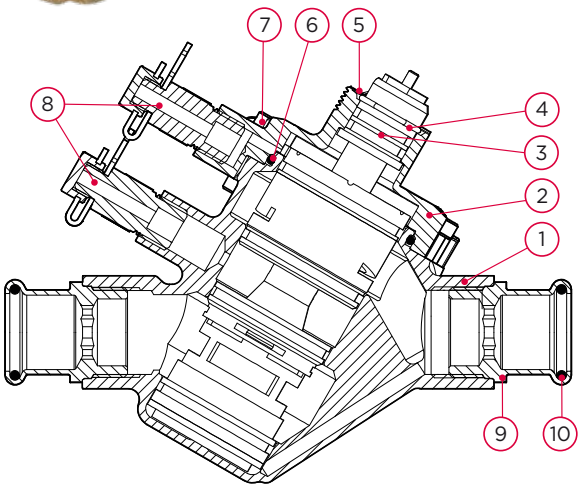

no.	component	material
1	body	DN15-25: brass (CW511L) DN32-50: brass (CC770S lead-free)
2	cap	DN15-25: brass (CW511L) DN32-50: brass (CC770S lead-free)
3	cartridge	polyphenylene sulphide (PPS)
4	spring clip	stainless steel (302526)
5	indicator	stainless steel (AISI 304)
6	o-ring	EPDM (EP1/1/5)
7	socket screw	stainless steel (A2-70)
8	test point	brass (CW602N)
9	end connection	gunmetal (EN CC491K)
10	o-ring	EPDM (EP1/1/5)

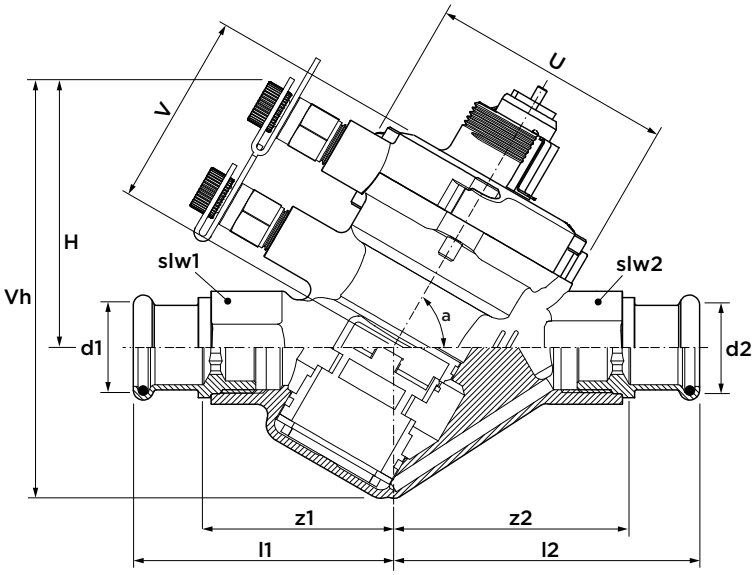

maximum pressure [bar]

operating pressure	test pressure shell	test pressure seat
16	24	n/a

pressure equipment directive category

all sizes	SEP

dimension	article no.	weight [kg]	l1	l2	z1	z2	H	V	U [Ø]	a [°]	slw1/slw2	Vh?
G½" (DN15) LF	15184	0.748	67	78	46	47	69	45	68	60	28	104
G½" (DN15) SF	15185	0.748	67	78	46	34	69	45	68	60	28	104
G½" (DN15) HF	15186	0.748	67	78	46	47	69	45	68	60	28	104
G¾" (DN20) SF	15187	1.186	70	90	70	56	78	57	81	60	34	122
G¾" (DN20) HF	15188	1.186	70	90	70	56	78	57	81	60	34	122
G1" (DN25) SF	15189	1.773	86	109	63	86	89	65	108	60	41	132
G¾" (DN25) HF	15199	1.773	86	109	63	86	89	65	108	60	41	132
G1¼" (DN32) HF	15200	2.381	98	119	71	93	102	77	124	60	50	156
G1¾" (DN40) SF	15274	4.038	114	148	84	118	129	107	162	60	57	195
G2" (DN50) HF	15275	4.775	129	157	94	122	128	106	162	60	70	195

	flow [l/s]		flow [l/min]		flow [l/h]	
dimension	**min.**	**max.**	**min.**	**max.**	**min.**	**max.**
G½" (DN15) LF	0.009	0.033	0.54	1.98	32.4	118.8
G½" (DN15) SF	0.029	0.146	1.74	8.76	104.4	525.6
G½" (DN15) HF	0.080	0.308	4.80	18.48	288.0	1108.8
G¾" (DN20) SF	0.097	0.264	5.82	15.84	349.2	950.4
G¾" (DN20) HF	0.229	0.585	13.74	35.1	824.4	2106.0
G1" (DN25) SF	0.235	0.589	14.1	35.34	846.0	2120.4
G¾" (DN25) HF	0.393	0.86	23.58	51.6	1414.8	3096.0
G1¼" (DN32) HF	0.503	1.159	30.18	69.54	1810.8	4172.4
G1¾"(DN40) SF	0.981	1.988	58.86	119.28	3531.6	7156.8
G2" (DN50) HF	1.347	3.168	80.82	190.08	4849.2	11404.8

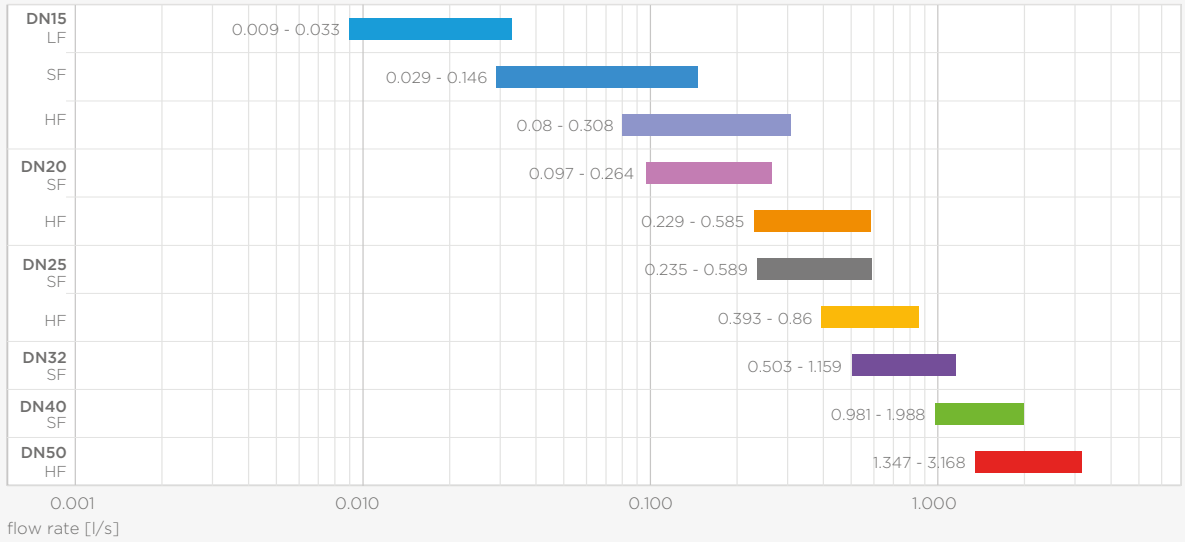

flow rate Pegler ProFlow 1500 PICV

PSU1500 Pegler ProFlow pressure independent control valve

(2 x press, with union connection, outlet)

specifications

- built in direct flow measurement with venturi technology
- clear visual indicator for settings
- new Fast Flush cap for simplified access to cartridge and flushing
- VSH XPress connections for copper, carbon steel and stainless steel tube
- differential pressure control range 30-400 kPa
- on/off control characteristic

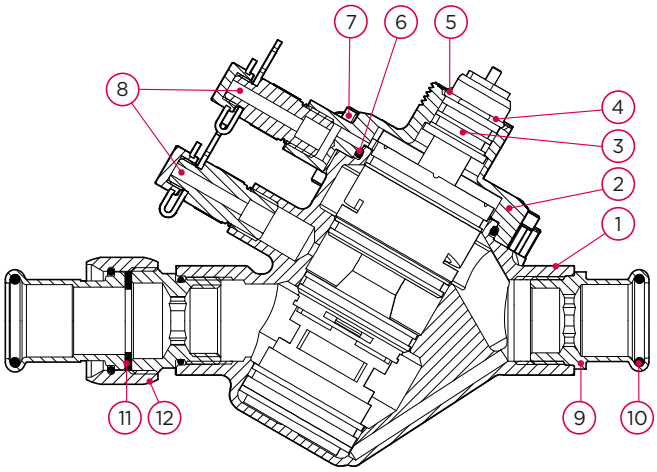

no.	component	material
1	body	DN15-25: brass (CW511L) DN32-50: brass (CC770S lead-free)
2	cap	DN15-25: brass (CW511L) DN32-50: brass (CC770S lead-free)
3	cartridge	polyphenylene sulphide (PPS)
4	spring clip	stainless steel (302526)
5	indicator	stainless steel (AISI 304)
6	o-ring	EPDM (EP1/1/5)
7	socket screw	stainless steel (A2-70)
8	test point	brass (CW602N)
9	end connection	gunmetal (EN CC491K)
10	o-ring	EPDM (EP1/1/5)
11	flat seal	fibre
12	union nut	brass (CW602N)

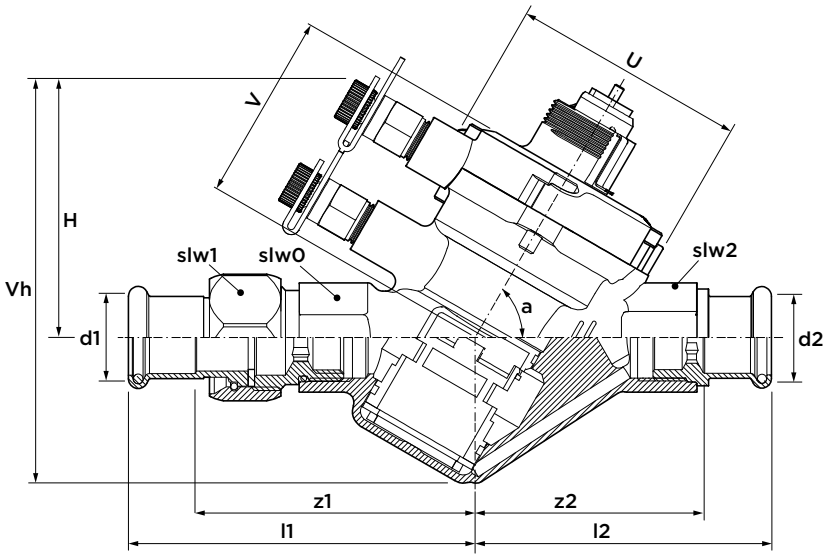

maximum pressure [bar]

operating pressure	test pressure shell	test pressure seat
16	24	n/a

pressure equipment directive category

all sizes	SEP

dimension	article no.	weight [kg]	l1	l2	z1	z2	H	V	U [Ø]	a [°]	slw0	slw2	Vh
G½" (DN15) LF	15459	0.834	67	100	46	80	69	45	68	60	28	30	104
G½" (DN15) SF	15461	0.834	67	100	46	80	69	45	68	60	28	30	104
G½" (DN15) HF	15463	0.834	67	100	46	80	69	45	68	60	28	30	104
G¾" (DN20) SF	15464	1.315	70	119	70	99	78	57	81	60	34	36	122
G¾" (DN20) HF	15466	1.315	70	119	70	99	78	57	81	60	34	36	122
G1" (DN25) SF	15467	1.953	86	134	63	111	89	65	108	60	41	46	132
G¾" (DN25) HF	15469	1.953	86	134	63	111	89	65	108	60	41	46	132
G1¼" (DN32) HF	15479	2.619	98	145	71	119	102	77	124	60	50	52	156
G1¾"(DN40) SF	15488	4.315	114	175	84	146	129	107	162	60	57	58	195
G2" (DN50) HF	15489	5.216	129	186	94	152	128	106	162	60	70	75	195

	flow [l/s]		flow [l/min]		flow [l/h]	
dimension	**min.**	**max.**	**min.**	**max.**	**min.**	**max.**
G½" (DN15) LF	0.009	0.033	0.54	1.98	32.4	118.8
G½" (DN15) SF	0.029	0.146	1.74	8.76	104.4	525.6
G½" (DN15) HF	0.080	0.308	4.80	18.48	288.0	1108.8
G¾" (DN20) SF	0.097	0.264	5.82	15.84	349.2	950.4
G¾" (DN20) HF	0.229	0.585	13.74	35.1	824.4	2106.0
G1" (DN25) SF	0.235	0.589	14.1	35.34	846.0	2120.4
G¾" (DN25) HF	0.393	0.86	23.58	51.6	1414.8	3096.0
G1¼" (DN32) HF	0.503	1.159	30.18	69.54	1810.8	4172.4
G1¾"(DN40) SF	0.981	1.988	58.86	119.28	3531.6	7156.8
G2" (DN50) HF	1.347	3.168	80.82	190.08	4849.2	11404.8

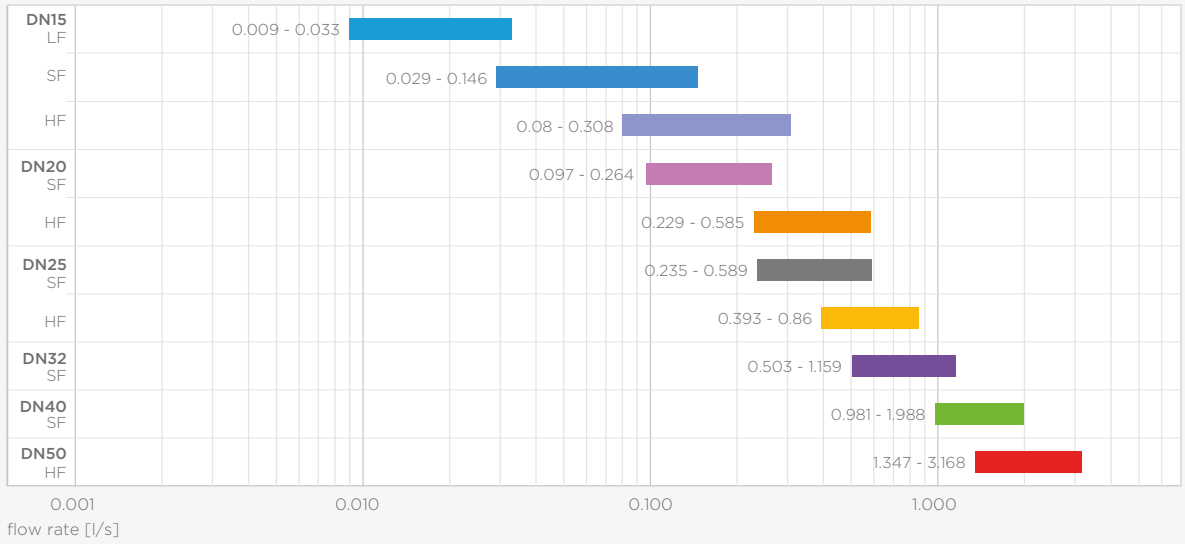

flow rate Pegler ProFlow 1500 PICV

Pegler ProFlow

tools and accessories

AT01 electro thermal actuator

(open/closed)

specifications

- compact dimensions
- first-open function
- maintenance free
- noiseless
- low power consumption
- 360° installation position
- fire resistance to UL94V-0
- position indicator

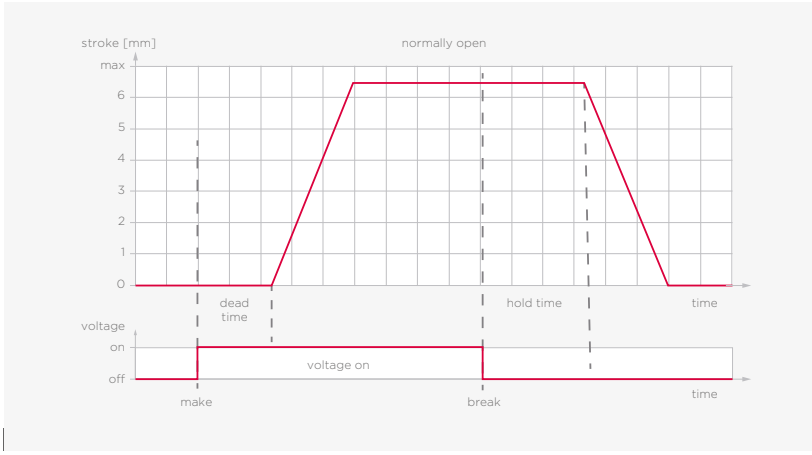

specifications	On/Off actuator 24V	On/Off actuator 230V
operating voltage	24V AC/DC -10 % to +20 %	230V AC -10 % to +10 %
operating power	2.3V A 1W	3.6V A 1W
actuator stroke	4 mm	4 mm
stroke time	approx. 3.5 min/ 4 min/5 min	approx. 3.5 min/ 4 min/5 min
actuating force	100/125N	100/125N
ambient temperature - fluid temperature - storage	0 to 60°C 0 to 100°C -25 to 60°C	0 to 60°C 0 to 50°C -25 to 60°C
protection class	IP54	IP54
connecting cable	1 m, 2 core	1 m, 2 core
housing	plastic	plastic
CE conformity	EN 60730-1	EN 60730-1

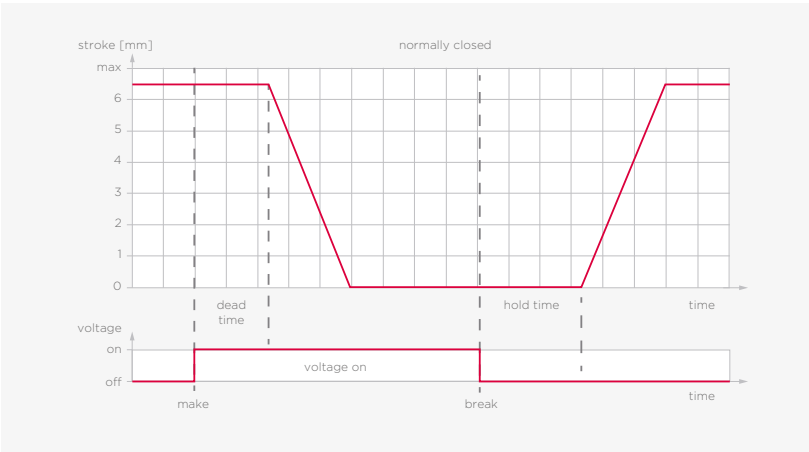

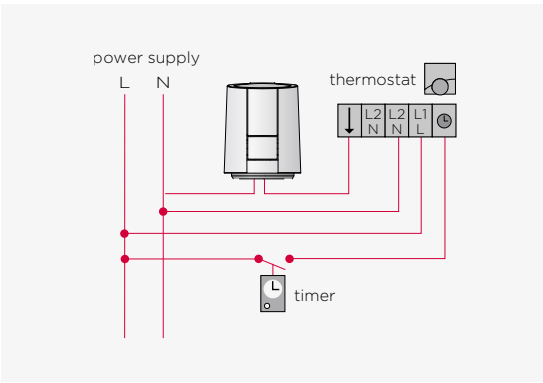

In the example above the actuator is connected to a power supply of 24V AC, 24V DC or 230V AC. In case the thermostat switch is activated and the actuator being in the normally closed version, the valve is opened steadily by the plunger motion. In the normally open version the valve is closed.

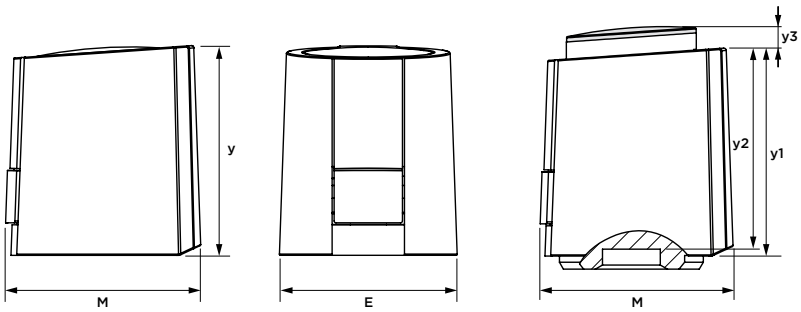

actuator type	article no.	voltage	weight [kg]	E	M	y1	y2	y3
DN15 - DN32 (normally closed - NC)	15202	24V AC/DC	0.14	44	48	52	50	7
DN15 - DN32 (normally closed - NC)	15280	230V AC	0.14	44	48	52	50	7

AE01 electro thermal actuator

(proportional control, normally closed)

specifications

- proportional actuator
- compact dimensions
- first-open function
- maintenance free
- noiseless
- low power consumption
- 360° installation position
- fire resistance to UL94V-0

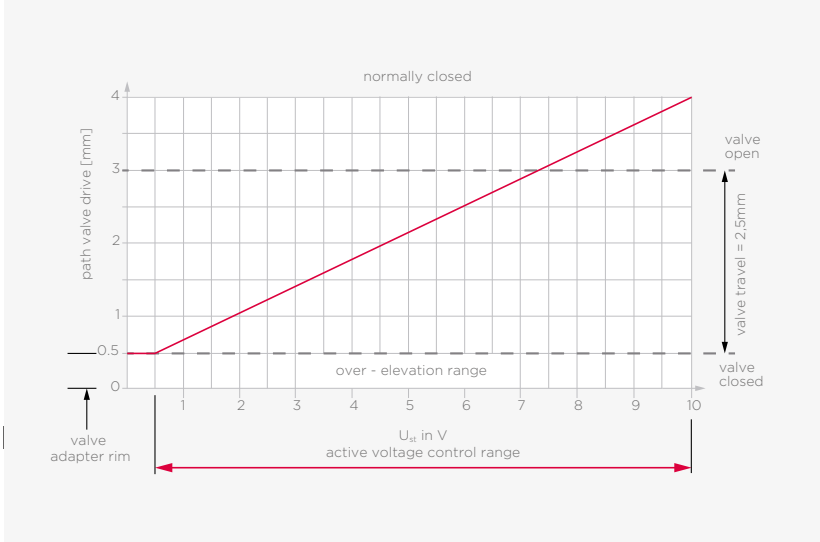

specifications	modulating actuator 24V
operating voltage	24V AC
operating power	3.1V A
actuator stroke	4 mm
stroke time	approx. 3.5 min/4 min/5 min
actuating force	100/125N
ambient temperature - fluid temperature - storage	0 to 60°C 0 to 50°C -25 to 60°C
protection class	IP54
ambient humidity	0 - 95%
connecting cable	colour-coded fly lead, 1 m, 3 core
housing	plastic
CE conformity	EN 60730-1

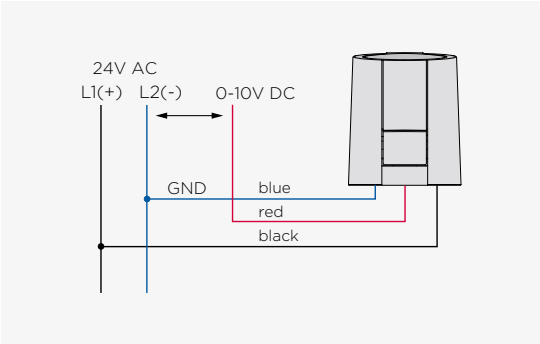

The above example is connected to a 24V AC or 24V DC power supply, with a control voltage from 0-10V-DC. When the control voltage is increased, the electronic control system immediately adapts the heat input to the elastic element and the valve is further opened, with the valve being normally closed (0 Volt).

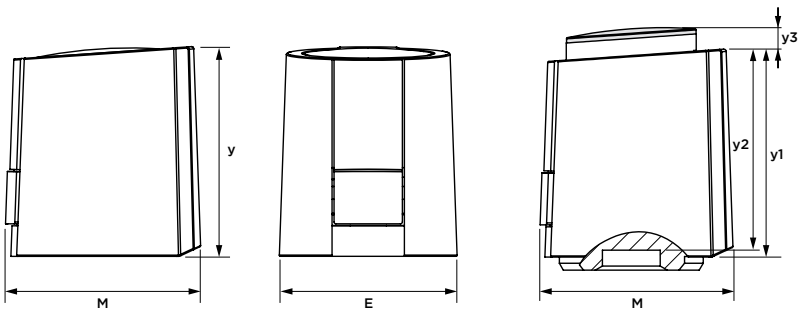

actuator type	article no.	voltage	weight [kg]	E	M	y1	y2	y3
DN15 - 32 (normally closed - NC)	15281	24V AC (10V DC)	0.14	44	48	52	50	7

AP02 electro motoric actuator modulating

(proportional control, normally open)

specifications

- fast acting
- double colour LED
- removable cable
- direct acting

specifications	modulating floating 24V
operating voltage	24V AC +/-10%
operating power	2.5V A
actuator stroke	3.2 mm
stroke time	8 sec/mm
actuating force	120N
ambient temperature	0 - 60°C
-operating	0 - 50°C
-storage	-20 - 65°C
protection class	IP43
ambient humidity	0 - 95%
connecting cable	1.5 m (3 x 0.35 mm²)
housing	ABS + PC
CE conformity	EN 60730-1

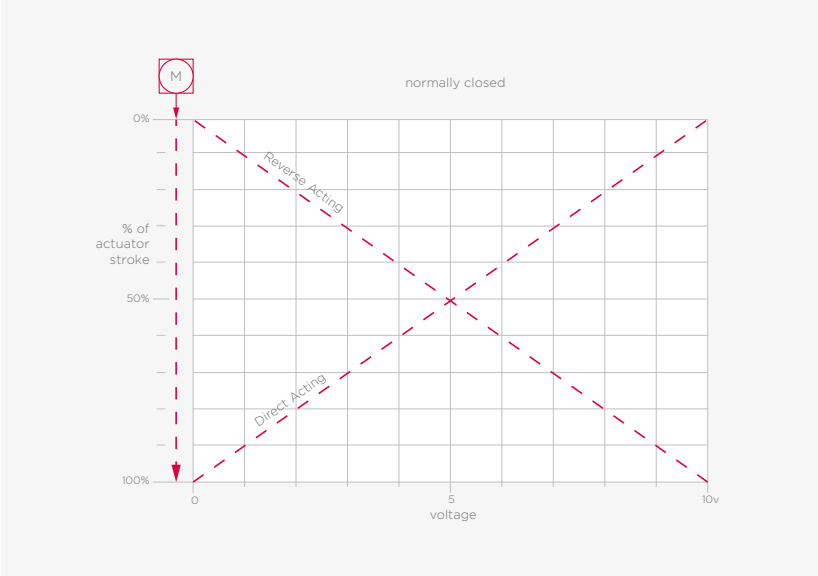

DIP switch 4 sets whether the actuator is 'Direct Acting' or 'Reverse Acting'

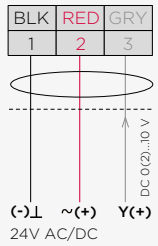

24V AC/DC proportional model

When the power is applied, the actuator self-calibrates performing an auto zero detection cycle. The actuator moves the stem down for a complete mechanical valve stroke until no changes are detected. Once the auto-zero is detected the actuator moves the stem accordingly with the input signal, within the value of the electrical stroke as per jumper setting.

When the input signal increases (eg. from 0V to 10V) the actuator stem extends if the actuator is configured as Direct Action (DA).

When the input signal decreases (eg. from 10V to 0V) the actuator stem retracts if the actuator is configures as Direct Action (DA).

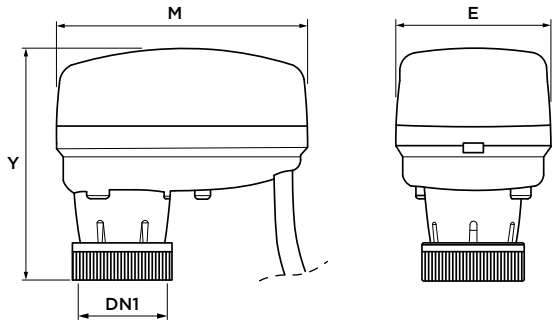

actuator type	article no.	voltage	weight [kg]	DN1	E	M	Y
DN15 - DN25 (normally open - NO)	18275	24V AC (0-10V DC)	0.2	M30 x 1.5	49	80	74

AP01 electro motoric actuator

(proportional control with feedback, normally open)

specifications

- fast acting
- double colour LED
- removable cable
- self adapting
- includes feedback
- Factory setting: 'Reverse Acting'

specifications	proportional actuator 24V
operating voltage	24V AC
operating power	6.0V A
actuator stroke	6.3 mm self adapting
stroke time	8 sec/mm
actuating force	160N
ambient temperature	0 - 60°C
-operating	0 - 50°C
-storage	-20 - 65°C
protection class	IP54
ambient humidity	0 - 95%
connecting cable	2 m (4 x 0.35 mm²)
housing	ABS + PC
CE conformity	EN 60730-1

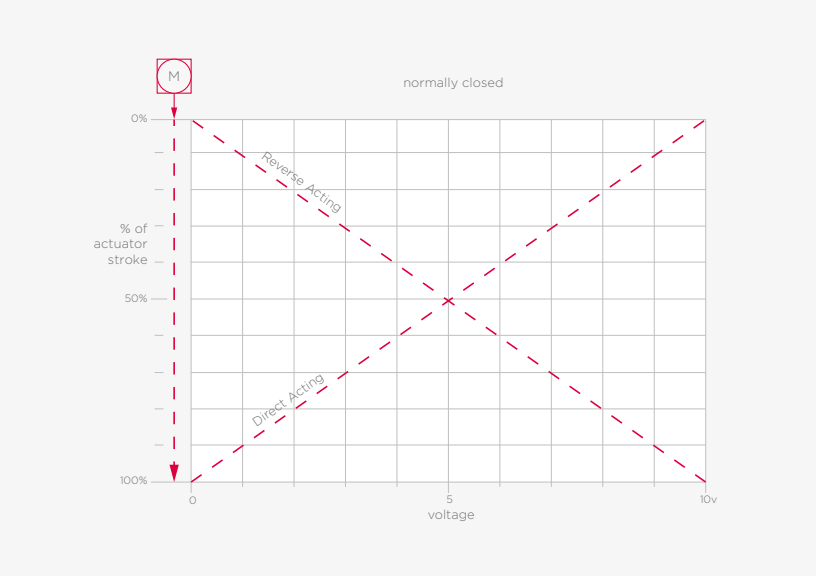

DIP switch 4 sets whether the actuator is 'Direct Acting' or 'Reverse Acting'

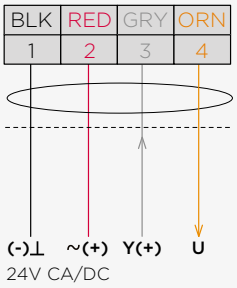

When the power is applied, the actuator self-calibrates performing an auto zero detection cycle. The actuator moves the stem down for a complete mechanical valve stroke until no changes are detected. Once the auto-zero is detected the actuator moves the stem accordingly with the input signal, within the value of the electrical stroke as per jumper setting.

When the input signal increases (eg. from 0V to 10V) the actuator stem retracts if the actuator is configured as Reverse Action (RA).

When the input signal decreases (eg. from 10V to 0V) the actuator stem extends if the actuator is configured as Reverse Action (RA).

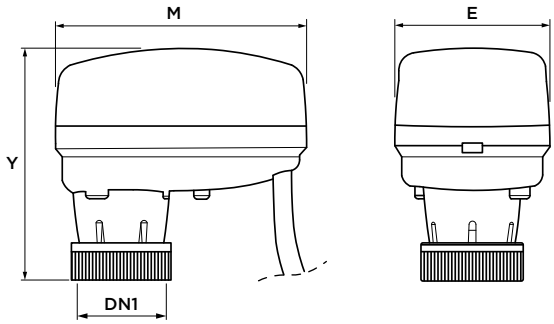

valve type	article no.	voltage	weight [kg]	DN1	E	M	Y
DN15 - DN25 (normally open - NO)	18276	24V AC (0-10V DC)	0.2	M30 x 1.5	49	80	74

AVUE motoric actuator

(DN40 - 50)

specifications

- AVUE actuators: proportional or increase/ decrease control
- PC board with 2 micro-switches for position detection
- IP43 protection class
- manual override with a 3 mm Allen Key
- proportional actuators compatible with various signals
- feedback signal: 2 - 10V DC (2V = fully retracted, 10V = fully extended)
- LED identification for status and command
- actuator movement direction selected via dip-switch

specification	proportional actuator 24V
operating voltage	24V AC
operating power	3.6V A
control voltage	0-10V DC
actuator stroke	6.3 mm
stroke time	11.5 s/mm
actuating force	300N
ambient temperature	
- operating	-5.55°C
- storage	-25 - 65°C
protection class	IP43
ambient humidity	0-95%
connecting cable	1.5 m long, 5 core
CE conformity	EN 60730-1

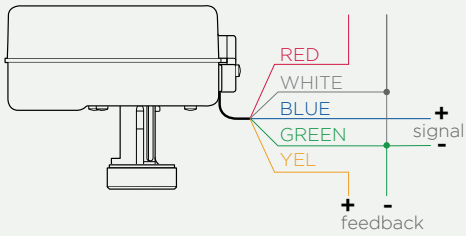

modulating

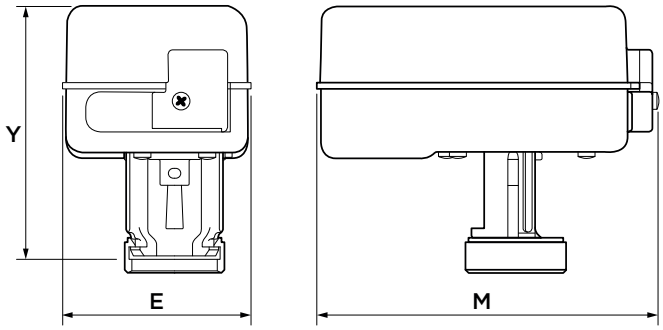

actuator type	article no.	voltage	weight [kg]	E	M	Y
AVUE06 DN 40-50 mod actuator 24V	15206	24V AC (0-10V DC) (5)	0.25	62	112	82

BC3 Pegler ProFlow balancing computer

specifications

- digital compensation of temperature effects
- user app for Android / iOS mobile devices
- correction of antifreese flow calculation
- easy selection of balancing valve according to valve illustration
- capability of saving up to 2000 measured valves
- cover IP65 rated

Verification of flow can be done using a suitable flow measurement device and utilising the built-in test points on the valve.

The Pegler ProFlow BC3 balancing computer is supplied pre-programmed with the loss coefficient data (k values) allowing a direct measurement of flow rate to be obtained ensuring the system is balanced correctly to achieve optimum efficiency.

To download app search for Pegler BC3

GET IT ON Google Play

Download on the App Store

App requires Pegler ProFlow BC3 balancing computer

product specification	
wireless data transfer	Bluetooth low energy 5.0
power supply	AAA Alkaline batteries or NiMH rechargeable batteries
power consumption	25 mA
operating time	45 h Max
zeroing of the pressure measurement	mechanical with hydraulic bypass
water resistance	IP65
calibration validity	24 months

maximum pressure conditions	
normal pressure range	1.000 kPa
max. over pressure	120% of nominal pressure
linearity and hysteresis error	0.15% from nominal pressure range
error for the pressure range 0 till 5 kPa after pressure zero setting	± 50 Pa for nominal pressure range 1 MPa
temperature error	0.25 % from nominal pressure range
medium temperature**	-5 - 90°C
ambient temperature	-5 - 50°C
storage temperature	-5 - 50°C

** measured at the end of measuring hoses, length 1.5 m. Hot water flows through BC3 ProFlow Technics hydraulic parts during pressure zero procedure. Maximum time duration of zeroing when temperature of the medium exceeds 50°C is 10 seconds.

article no.	description	weight [kg]	length [mm]	width [mm]	height [mm]
16395	Pegler ProFlow BC3	0.420	180	80	52

1600SSP setting key
(for Pegler ProFlow 1600 PICV)

dimension	article no.
DN15 - DN25	16075

*see installation guidelines Pegler ProFlow 1600 PICV, page 22

1600PT operating tool
(for Pegler ProFlow 1600 PICV)

dimension	article no.
DN15	16079
DN20 - DN25	16080

*see installation guidelines Pegler ProFlow 1600 PICV, page 22

1600LPT locking pin and tether
(for Pegler ProFlow 1600 PICV)

dimension	article no.
DN15	16076
DN20 - DN25	16077

1600CRT cartridge
(for Pegler ProFlow 1600 PICV)

dimension	article no.	colour
DN15 low flow	16070	white
DN15 standard flow	16071	red
DN15 high flow	16072	black
DN20 standard flow	16073	white
DN20 high flow / DN25 standard flow	16074	black

1500CRT cartridge
(for Pegler ProFlow 1500 PICV)

dimension		article no.	colour
DN15	low flow	16081	white
DN15	standard flow	16082	red
DN15	high flow	16083	black
DN20	standard flow	16084	white
DN25	standard flow	16085	black
DN25	high flow	16086	black
DN32	standard flow	16087	black
DN40	standard flow	16088	black
DN50	high flow	16089	black

1500FLC setting and flushing cap
(for Pegler ProFlow 1500 PICV)

dimension	article no.
DN15	16090
DN20	16091
DN25	16092

1500FLP setting and flushing plug
(for Pegler ProFlow 1500 PICV)

dimension	article no.
DN30-50	16093

disclaimer:
The technical data are non-binding and do not reflect the warranted characteristics of the products. They are subject to change. Please consult our General Terms and Conditions. Additional information is available upon request. It is the designer's responsibility to select products suitable for the intended purpose and to ensure that pressure ratings and performance data are not exceeded. The installation instructions should always be read and followed. The system must always be depressurized and drained before any components, whether defective or otherwise, are removed, modified or corrected.

aalberts integrated piping systems

more information?

For a complete and up-to-date product range and our additional services, visit: www.aalberts-ips.co.uk

Would you like to make an appointment to meet an account manager in your region or receive advice and support from one off our experts? Please contact:

Aalberts integrated piping systems Ltd
tel: +44 (0) 1302 560 560
email: info.uk@aalberts-ips.com
www.aalberts-ips.com

All brand names and logo styles are registered trademarks.
Maintaining a policy in this publication without prior notice.

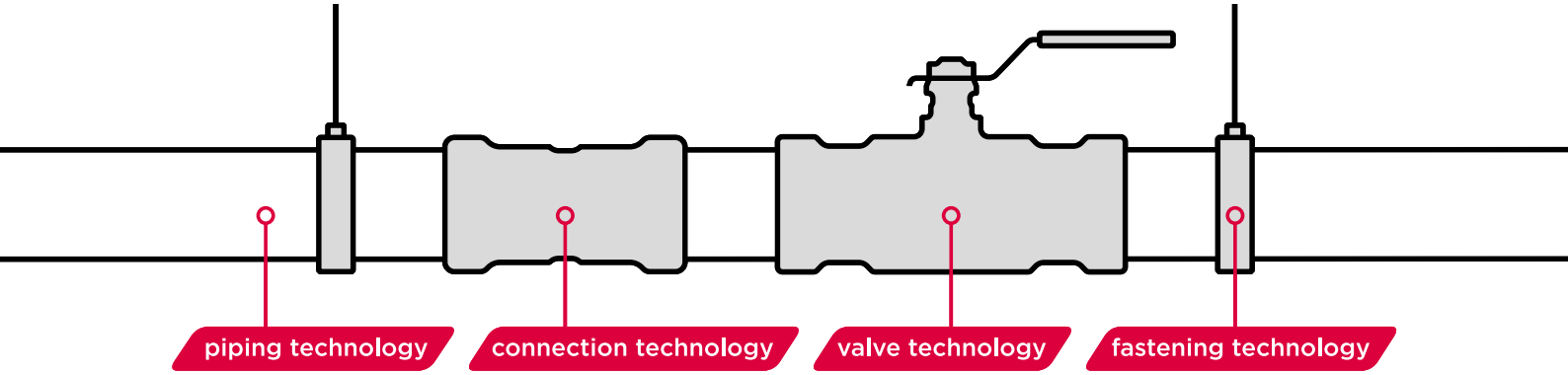

Aalberts integrated piping systems Ltd
St. Catherine's Avenue / Doncaster
South Yorkshire / DN4 8DF / England
www.aalberts-ips.co.uk

PEGLER Valve technology

5009999-2023-2.0 UK